Horizon 2020
European Union Funding
for Research & Innovation

GEARBODIES

Grant Agreement Number: 101013296
Project Acronym: GEARBODIES
Project title: Innovative Technologies for Inspecting Carbodies and for Development of Running Gear

DELIVERABLE D 1.3
Terms of reference, requirements and specifications for novel journal bearing concept

Project acronym:	GEARBODIES
Starting date:	01/12/2020
Duration (in months):	25
Call (part) identifier:	H2020-S2R-OC-IP1-02-2020
Grant agreement no:	101013296
Grant Amendments:	N/A
Due date of deliverable:	30-04-2021
Actual submission date:	04-05-2021
Coordinator:	Riccardo Licciardello
Lead Beneficiary:	DICEA
Version:	1.0
Type:	Report
Sensitivity or Dissemination level:	Public
Contribution to S2R TDs or WAs	TD1.4 running gear
Taxonomy/keywords:	Journal bearing, axlebox, requirements, specifications, railways, rail vehicle

This project has received funding from the Shift2Rail Joint Undertaking (JU) under grant agreement 101013296. The JU receives support from the European Union's Horizon 2020 research and innovation programme and the Shift2Rail JU members other than the Union.

Document history

Revision	Date	Description
0.1	04/01/2021	UNEW structure of deliverable common to D1.1, D1.2
0.2	23/01/2021	DICEA contributions: updated structure, proposed contributors, draft §3.2 use case
0.3	29/01/2021	AIMEN contribution draft §3.1.2.2 polymeric materials
0.4	02/02/2021	Revised slightly during WS2.2 meeting
0.41	12/02/2021	DICEA (§2, §3.2 and editing) and AIMEN (revised §3.1.2.2, new §5.3) contributions
0.42	05/03/2021	Previous version with added contributions from DICEA (§3.1.3 and consolidation), RWTH (§3.1.1), SCHA (first draft §3.2.5, §4, §5.1, §5.4), UNEW (§3.1.2, §3.3)
0.43	22/03/2021	Additions: §3.1.1 consolidated (DICEA), §3.1.2.1.2 (UNEW), §3.1.3.1 (UNEW), §3.3 revised (UNEW), §4 integrations (UNEW), §4.3 draft (DICEA)
0.5	26/04/2021	Additions: executive summary (DICEA), §3.1.1.2 (SCHA, RWTH and DICEA), §3.1.3.2.2 (SCHA, RWTH and DICEA), new §3.4 (UNEW and DICEA), revised §4 and conclusions (DICEA)
0.6.	27/04/2021	Integrations after WS2.2 review meeting to §3.2, §3.4, §4, §5.3 (DICEA)
1.0	04/05/2021	First issue

Report contributors

Name	Beneficiary Short Name	Details of contribution
Olalla SÁNCHEZ SOBRADO	AIMEN	§3.1.2.2 materials for cages, §5.3 specifications for polymers
Riccardo LICCIARDELLO	DICEA	Document management, executive summary, §2, §3.2, §3.4, §4, §6
Patrick SCHNEIDER	RWTH	§3.1.1, §3.1.3.2.2
Bert ROSENHEINRICH	SCHA	§3.2.5, §4, §5.1, §5.4, §3.1.1, §3.2
Philipp WIRTH	SCHA	§3.2.5, §4, §5.1, §5.4, §3.1.1, §3.2
Cristian ULIANOV	UNEW	Document structure, §1, §3.1.2, §3.1.3.1, §3.3, §4 (draft)
Adrian OILA	UNEW	§3.1.2, §3.1.3.1, §3.3, §5.2.1
Angel IZQUIERDO SÁNCHEZ	UNEW	§3.1.2, §3.1.3.1, §3.3, §5.2.1
Patrick Schneider	RWTH	1st document review
Celestino Sánchez	EUR	2nd document review

Table of contents

Executive Summary

The research on journal bearings described in this report is intended to stimulate positive impacts for all high-speed train operators in Europe by reducing their maintenance costs, and in turn improving the rail mode's competitiveness with positive repercussions on the well-being of future generations of Europeans. It represents the work performed within Work Stream 2.2 in the first of the four phases of the GEARBODIES project.

The journal bearings are the elements of a railway vehicle that connect the wheelset (more precisely the part of the axle called the journal) to the axleboxes, which in turn support the primary suspension. They are also often called axlebox bearings, as they are housed inside the axlebox itself. Their inner ring is solidly mounted on the journal and rotates with the axle when the train is running; the outer ring is solid with the (non-rotating) housing. In between, the rollers, in an adequately lubricated and sealed environment, allow free relative rotation of the connected parts whilst transferring all the required loads.

The inclusion by SHIFT2RAIL of journal bearings among the aspects of railway running gear deserving further research testifies their importance as a cost driver for rolling stock maintenance, particularly for high-speed trains.

In this report, the methodical re-design of future generations of bearings is initiated. Between December 2020 and April 2021, three universities (SAPIENZA University of Rome, RWTH in Aachen, University of Newcastle) and a research centre (AIMEN in Galicia, Spain) joined forces with a key European bearing manufacturer (Schaeffler) to develop Design Concepts (DC) of long-life journal bearings. In the preparatory first phase reported here, the work has consisted mainly of desk research to set the terms of reference, requirements and specifications for the DCs. In the subsequent phases of the 2-year project the DCs will be further refined (phase 2), developed (phase 3) and tested up to Technology Readiness Level TRL5 (phase 4).

As a first research result, the **terms of reference** are presented (§3). The state-of-the-art regarding the design, materials and lubrication of journal bearings is described, as well as emerging solutions. Today, the bearings are arranged in two units, one on each side of the wheelset, each consisting of two bearings in the same sealed housing. The rollers are most often steel tapered rollers (i.e. conical), but cylindrical rollers are also in use. The rollers are held in place by cages often made from glass-fibre reinforced polyamide and grease-lubricated. The bearings are almost universally situated out-board of the wheels. In-board bearings are of increasing interest for their mass and aerodynamic drag reduction potential. The main features of the bearing's operating life are represented in a GEARBODIES journal-bearing use-case based on that for SHIFT2RAIL's System Platform Demonstrator SPD1 'high-speed': about 450,000 km run per year on a 300 km long high-speed line with operating speeds of up to 300 km/h. The maintenance interval for the bearings is assumed to be 1.65 Mkm, after which they are often replaced. The current limitation behind the bearings'

maintenance plan is generally the lifetime of the grease, influenced essentially by operating temperatures and contaminants. With correct lubrication, steel fatigue is currently not a major problem, and the polymers used for cages and seals are not a limiting factor. Of the several deterioration phenomena and failure modes presented in the report, the majority occur when lubrication fails. Current research and emerging solutions for bearing design and lubrication, based on the analysis of several recent patents, appears to focus on the improvement of details, with no evidence of major rethinking of bearing layout and materials. On the other hand, research on new materials is seeing a breakthrough with Multi-Principal Element Alloys (of which the most interesting class are High Entropy Alloys HEA). Differently from conventional alloys - composed of one principal element (such as iron for steel alloys) with secondary elements in much lower concentrations - HEA involve 5 or more principal elements all in relatively high concentrations. The large number of element combinations implies an enormous number of possible systems and the freedom to tune compositions to achieve desired mechanical properties. HEA are thus quite promising for the development of highly wear-resistant and low-friction rollers and rings. Research on polymer materials for journal bearings sees no major breakthroughs. However, their mechanical properties are gradually being improved. There is no evidence on major work for the improvement of ageing behaviour, which is key in GEARBODIES. To finalise the work on the terms of reference, the most promising Technology Concepts (TC) identified by means of the above analysis are assessed and shortlisted for the subsequent phases of GEARBODIES.

Based on the above terms of reference, high-level requirements for the future generations of journal bearings are formulated (§4). These include lower bearing life-cycle costs, but also high reliability/availability, low mass for both track maintenance and traction energy impacts, compatibility with standards and regulations, and no additional burden for handling, inspection and management of parts and consumables. The most important Key Performance Indicators are those regarding bearing lifetime. A significant lifetime extension– from today's 1.6-1.7 million kilometres (Mkm) and around 4 years at best to over 10 Mkm and 25 years (SHIFT2RAIL vision) – is key in reducing the number of costly overhauls required by the railway vehicle over its lifetime. The GEARBODIES targets are set in two steps: extra-long lifetime (maintenance interval of 3 Mkm) and ultra-long lifetime (maintenance interval of over 5 Mkm, with bearings always lasting at least two intervals or about 25 years). Extra-long lifetimes should be achievable by prolonging lubricant life. For ultra-long lifetimes, other factors could limit the bearings' life even with perfect lubrication, e.g. the development of fatigue cracks due to metastable steel phases (e.g. martensite), cage failure due to ageing of the polymers.

Correspondingly, the specifications for the GEARBODIES journal-bearing Design Concepts are set in two categories (§5).

1. Extra-long-lifetime, higher TRL (TRL5), "focussed" Design Concept. This DC focusses on the background work of Schaeffler. It is based on state-of-the-art

materials and a radical change of roller geometry (ball rollers) with a novel arrangement designed to minimise frictional heat and prolong lubricant life.

2. Ultra-long-lifetime, lower TRL (TRL 3-4), “open” Design Concepts. These DCs are still open at this stage as their name suggests. Some of the shortlisted TCs will be assessed and selected in the second GEARBODIES phase for further development. At this stage, lubricants and sealing will most likely be state-of-the-art, the bearing layout is still quite open, and the roller/ring and cage materials will be novel.

List of figures

List of tables

Abbreviations and acronyms

Abbreviation/ Acronym	Description
AHP	Analytical Hierarchy Process
BB	Building Block
BCC	Body-Centred Cubic
CCA	Complex Concentrated Alloy
CF	Carbon Fibre
CVD	Chemical Vapour Deposition
DC	Design Concept
DER	Dark Etching Region
EHL	Elasto-Hydro-Dynamic Lubrication
FCC	Face-Centred Cubic
GF	Glass Fibre
HEA	High Entropy Alloy
HEAF	High Entropy Alloy Film
HRC	Hardness Rockwell scale C
HS	High-Speed
Hv	Hardness Vickers
IP1	Innovation Programme 1 of Shift2Rail (Cost-efficient and reliable trains, including high-capacity trains and high-speed trains)
LCC	Life-cycle cost
MAAP	Multi Annual Action Plan (of Shift2Rail Joint Undertaking)
MPEA	Multi-Principal Element Alloy
PA46, PA66	Polyamide 46, Polyamide 66
PEEK	PolyEtherEtherKetone
PIVOT2	Performance Improvement for Vehicles on Track 2 (S2R IP1 project)
PM	Powder Metallurgy
PVD	Physical Vapour Deposition
RAMS	Reliability, Availability, Maintainability and Safety
RCF	Rolling Contact Fatigue
S&C	Switches and Crossings
S2R	Shift2Rail Joint Undertaking (under the H2020 framework)
SOA	State-Of-the-Art
SPD	System Platform Demonstrator
TAROL	Tapered Roller (bearing)
TC	Technology Concept
TD1.3	Technology Demonstrator 1.3 within IP1 of S2R (Carbody Shell Demonstrator)

TD1.4	Technology Demonstrator 1.4 within IP1 of S2R (Running Gear Demonstrator)
TRL	Technology Readiness Level
TSD	Thermal Spray Deposition
WEA	White Etching Area
WEC	White Etching Crack
WP	Work Package
WS	Work Stream (of the GEARBODIES project)

1. Introduction

The present document represents the Deliverable D1.3 "Terms of reference, requirements and specifications novel journal bearing concept" of the GEARBODIES project, funded by the European Commission within the framework of Shift2Rail (S2R) programme.

The GEARBODIES project is part of Innovation Programme 1 (IP1) "Cost-efficient and reliable trains, including high-capacity trains and high-speed trains" of the Shift2Rail Joint Undertaking, within the framework of Horizon 2020. According to the Shift2Rail Annual Work Plan and Budget 2020 (Shift2Rail, 2020), it is expected that GEARBODIES will contribute to two Technology Demonstrators (TD) in IP1, i.e.:

TD1.3 Carbody Shell Demonstrator;

TD1.4 Running Gear Demonstrator.

Therefore, the GEARBODIES consortium will collaborate with PIVOT2 (Performance Improvement for Vehicles on Track 2), the complementary project for S2R members, which will run in the same period.

The work carried out within the Work Stream 2 of GEARBODIES (WS2: Innovative approaches for developing running gear components) will contribute to TD1.4, in particular to its building block (BB) BB1.4_2 "New materials for bogies" and its associated deliverable D1.4_2. This relation is shown in Figure 1.

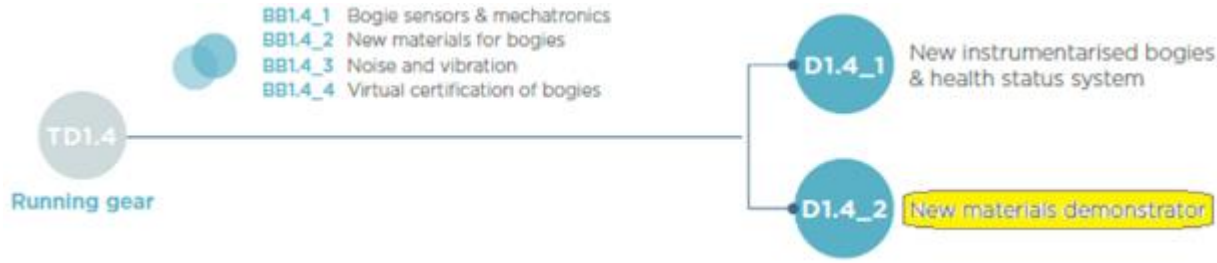

Figure 1. The building blocks associated with TD1.4 and their related deliverables (S2R MAAP, 2019).

In this context, the review and preliminary assessment of existing and emerging technologies and technical solutions, as well as the definition of requirements for specific use cases identified and agreed on with the PIVOT2 consortium, are key pre-requisites for further work in GEARBODIES. In the first instance, the shortlist of selected available solutions and the requirements for key use cases for journal bearings enabled the definition of specifications for technologies and technical solutions that would be further developed and tested in GEARBODIES, at Technology Readiness Level (TRL) 4-5.

2. Objective/Aim

The journal bearings are the elements that connect the wheelset (more precisely the part of the axle called the journal) to the axleboxes, which in turn support the primary suspension. They are also often called axlebox bearings. Their main function is to allow free relative rotation of the connected parts whilst transferring all the required loads (longitudinal, lateral, vertical, and all torques except about the lateral axis). Roller bearings are nowadays of almost universal use and have in practice entirely replaced the plain bearings of the past.

For high-speed applications, two bearings are generally mounted to form a bearing unit. Tapered rollers (i.e. conical) and cylindrical rollers are both in use. The rollers are held in place by cages often made from glass-fibre reinforced polyamide. During operation, the rollers are in contact with an inner race and an outer race (respectively on the inner/outer rings). Bearing units are supplied ready for mounting, where the lubricant selection and seal design are matched to the application.

GEARBODIES WS2.2 focusses on the Life-Cycle Cost (LCC) aspects of bearing units, and in particular their lifetime, which is the main cost driver for this component. In particular, extending maintenance intervals for high-speed applications could lead to significant operator benefits. With the current state of the art, maintenance intervals up to 1.65 million kilometres are possible with favourable operating parameters and corresponding operational experience. Extension to intervals above 2.0 million kilometres represents a significant challenge probably requiring major breakthroughs in more than one of the key elements mentioned above.

Assuming correct mounting and compliance with the maintenance plan, the length of the maintenance interval is above all determined by the lubricant operating life, depending on the operating conditions (vibration levels, contaminants, climate conditions etc.). Low friction is essential to keep average operating temperatures as low as possible since this has a significant influence on lubricant lifetime. Low friction is ensured mainly by the roller/race geometry and materials and by the cage materials all working well with the lubricant. Low friction also reduces rolling resistance and energy consumption.

Correspondingly, one main focus of GEARBODIES WS2.2 is to explore the possibilities for extra-long lubricant lifetime by reducing its degradation over time and, if required, by facilitating its replacement (see Figure 2).

In this respect, the expected GEARBODIES key innovations are a. the lubrication concept (e.g. including answers to the questions: is replacement over the long lifetime needed? how can it be performed? is it an advantage to use oil instead of grease? what would be the required sealing properties? etc.) and b. the roller/race geometry (slight changes or radical re-thinking?) for low friction and low lubricant shear-stress (and degradation). In GEARBODIES, both these aspects will be tested in a bearing prototype subjected to rig tests (TRL4) based on the ones currently used for approval (EN 12082:2017). A key input to this

activity is Schaeffler's background work on innovative concepts that is integrated into GEARBODIES.

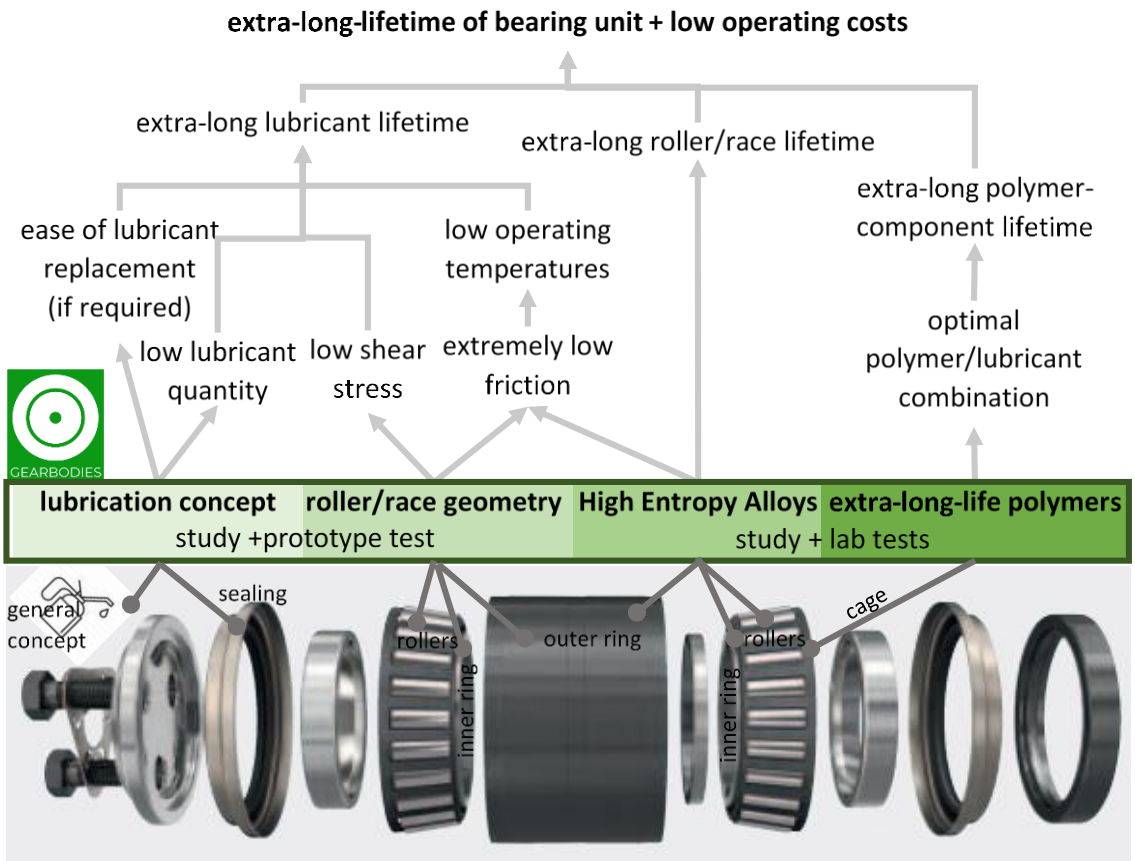

Figure 2. GEARBODIES topics in relation with bearing components (bottom) and impacts (top).

There is little benefit to extra-long lubricant life without extra-long component lifetime. Although no aspect will be ruled out *a priori*, the two other main focusses will be on roller/race and polymer-based component lifetime (ref. §3.1.2). Their lifetime should match or exceed that of the lubricant, in the latter case replacement of the lubricant would be required during the life of the bearing. The possibility of using the potentially outstanding features of High Entropy Alloys (HEA) for rollers and races will also be explored.

All of the above will contribute to concept designs: one based on a "focussed approach" taking forward Schaeffler's background work to a higher TRL (Technological Readiness Level), and one or more based on an "open approach", incorporating technology concepts of a lower TRL such as High Entropy Alloys, innovative cage materials, and other more radical solutions if promising.

Considering the project's aims described above, the objective of this document is to serve as a foundation for future GEARBODIES work by providing high-level specifications for the future design concepts and a short list of valid technology concepts (§5), based on the identified user requirements (§4) and building on the state-of-the-art, standards, and

emerging solutions defined in the terms of reference (§3). The document also serves as a discussion document for interaction with the PIVOT-2 consortium on the relevance of GEARBODIES work for the running-gear Technological Demonstrator TD1.4.

3. Overview and assessment of technologies, technical solutions and use cases

3.1. Overview and assessment of existing and emerging solutions

3.1.1. Design solutions for rail vehicle journal bearings

3.1.1.1. Solutions available on the market for high-speed applications

Within the subject area of bearings, this section of the document focusses on the description of bearings that are currently used as journal bearings in high-speed trains, and bearings that are not normally used for this application but that might be suitable for this application and give a longer lifetime with improved technology.

The bearings that are currently used for high-speed are of two types: tapered roller bearings and cylindrical roller bearings (Figure 3). The bearings form complete axle bearing units which are lubricated when delivered. This and the increasing high-speed capability of tapered roller bearings mean that they are currently gaining market share.

Figure 3. Examples of tapered and cylindrical roller bearings for high-speed applications and their location in the running gear (Schaeffler Technologies, 2019).

Some evolution in the use of bearing configurations has occurred in the past decades. With the start of highspeed traffic in Japan (Shinkansen 0, 1964), three main bearing configurations were present. At first triple bearings comprising a ball bearing and two cylindrical rollers were used. On-going optimisation of the system led to cylindrical roller bearings without ball bearings and then to tapered roller bearings for high-speed applications. Both are still used in modern high-speed vehicles. In the following tables, the three designs and their features are shown (based on the work of Schlapp, 2018, and Kilian, 2010).

The evolution of journal bearings over the decades is the result of technological improvements that have allowed axial forces on the bearings, countered by specific ball bearings in the early days, to be managed with cylindrical rollers only, and then with tapered rollers, which are more suitable for such forces, whilst maintaining the generated frictional power and consequent heat within the required limits even at very high rotational speeds.

Table 1. Bearing designs for high-speed. Tapered Roller Bearings in back-to-back configuration as state of the art (NTN SNR, 2021; NSK, 2021).

Tapered Roller Bearings
Tapered roller bearings consist of two tapered rollers and a cage generally made of polymeric materials. For high-speed vehicles an arrangement of a common outer ring and two separate inner rings is the general approach. 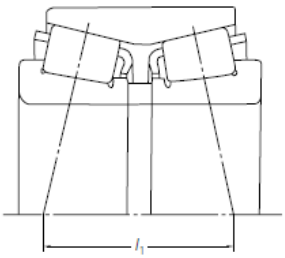 The rollers are guided by ribs on the inner rings. To perform properly a precise internal clearance adjustment is required. The advantage of tapered roller bearings is the capability to sustain higher axial forces than cylindrical roller bearings.

Table 2. Bearing designs for high-speed: cylindrical roller bearings.

Cylindrical Roller Bearings
Cylindrical roller bearings for high-speed vehicles consist of two sets of cylindrical rollers. Typical arrangements of the inner and the outer ring are two inner and outer rows or common inner or outer rings. Axial forces are transferred by ribs on the rings or by an additional ball bearing. This special case is described later. a) b) 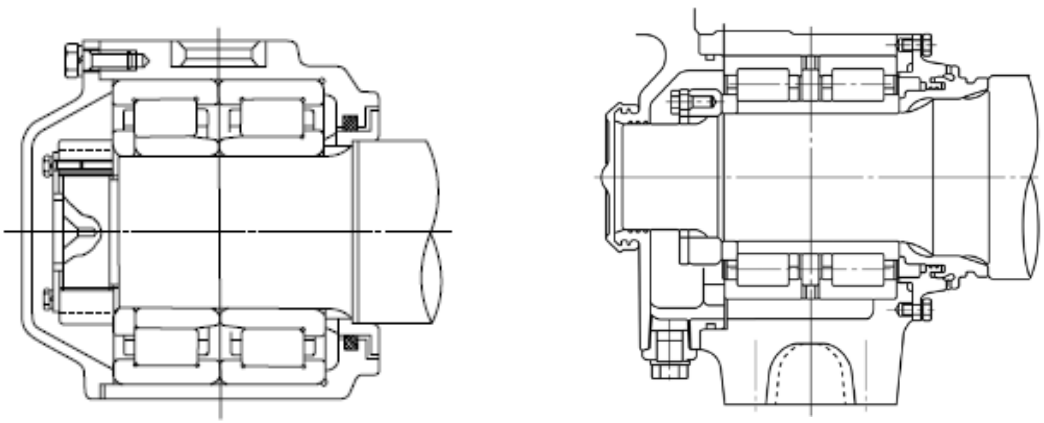 a) UIC Configuration of two single row cylindrical roller bearings b) Bearings of the Shinkansen Series 300 with a common inner ring (Schlapp, 2018; NSK, 2021; NTN SNR, 2021) Due to the low friction occurring the use cylindrical roller bearings have a very good capability for highspeed operations. Additional to that the assembly and disassembly are easier for maintenance and inspection. The capability to bear axial forces however is lower or needs additional measures.

Table 3. Bearing designs for high-speed: triple bearings (obsolete).

Triple Bearings
Adding a ball bearing to a cylindrical bearing to cover the axial loads is a possibility to cope with axial forces while using cylindrical rollers. Due to the weight of the bearing, this configuration is not state of the art anymore. It was used on French and Japanese high-speed vehicles. a) b) 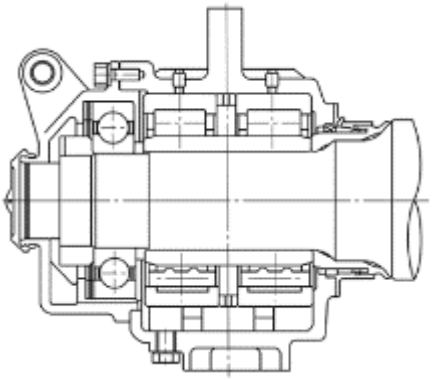 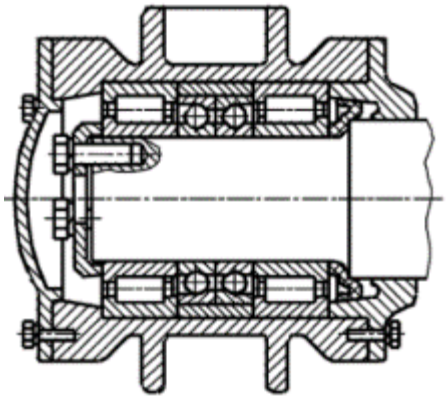 Use of ball bearings to sustain axial loads a) Shinkansen from 1967 (Schlapp, 2018; NSK 2021) b) French highspeed train (Iwnicki 2006)

Table 4 includes highspeed trains from all over the world and the information about the bearings used.

Table 4. Some highspeed vehicles and the used bearings.

Vehicle	Start of Operation	Bearing Design
ICE 1	1991	Tapered Rollers
ICE 2	1995	Tapered Rollers
ETR 450/460/470/480	1985	Tapered Bearings
KTX	1999	Tapered Bearings
Talgo 350	2004	Tapered Bearings
Sapsan/ Velaro RUS	2009	Tapered Rollers
CRH3C/ Velaro CN	2008	Tapered Rollers
Shinkansen 0	1964	Triple Bearings
Shinkansen 300	1992	Cylindrical Rollers
Shinkansen N700	2007	Tapered Rollers

The bearings for railway applications are manufactured according to a process that are

similar to all types of medium-large bearings. The manufacturing process of a tapered roller bearing consists of (Spencer, 2017):

1. Preparation of bearing materials. Preparation of materials is the first step to make roller bearings. The steels are first heated to about 1710°C to eliminate as many impurities as possible. Then the components are used to form high carbon chromium bearing steel, which has an extremely high tensile strength. Then it is formed to necessary shapes and sizes for the productions of different types of bearings. They are formed into wires, plates, tubes, bars and so on.
2. Forging. The steel bar is first heated then cut. It is then pressed by machine and molded into inner and outer ring shapes. The designated shapes are formed by hot forging.
3. Turning. For the turning of the inner ring, first, the surface on one side is cut, then the other. After that, the bore is cut. Then, it is chamfered. Finally, the raceway is cut, and the turning of the inner ring is completed. The turning of the outer ring is similar to that of the inner ring. The marks are stamped on the side surfaces of the ring indicating the information such as the brand and part number. Nowadays, more manufacturers are using laser marking machines.
4. Heat treatment. Because the inner and outer rings work under tremendous pressure and they repeatedly go through rolling motions, they must be extremely rigid and wear resistant. So, they have to go through quenching, which they are heated between 800 and 860°C, then instantly cooled. To boost wear resistance, they are held at 250°C to 200°C for a long period, then cooled slowly. This process is called tempering. Tempering must be done soon after quenching to reduce the risk of cracking.
5. Grinding. For the grinding of the outer ring, the side surface of the ring is first ground. Then the outer surface is ground so that it is precisely perpendicular to the side surface. Then using the outer surface as a reference, the raceway groove is honed. The same process applies to the inner ring.
6. Making of rollers. Steel wires are die-cut into cylinders to make the rollers. They then go through several surface finishing and heat treatment processes.
7. Making of cages. The fibre composite material, comprising a thermoplastic material with embedded fibres, is generally produced by injection moulding.
8. Assembly. Tapered roller bearings have the advantage that clearance or preload of the arrangement can be adjusted to the specifications during mounting. The axial internal clearance is determined by the spacer width difference to the outer ring. Nowadays, bearings are assembled by industrial robots. The machine places the correct number of steel rollers between the two rings. Cages are fitted. The assembled units are cleaned. Then the grease is squeezed evenly into the raceway, and the bearings are sealed.

3.1.1.2. Recent and emerging solutions

In this sub-section, solutions that are not available on the market or that are appearing only recently are described. The sources of information are mainly patents. The analysis of the scientific literature did not produce anything particularly relevant for the purposes of this report. On the other hand, the analysis of patents dated 2010 onwards performed on Espacenet (European Patent Office, 2021) and Depatis (German Patent and Trademark Office, 2021) produced the interesting selection shown in Table 5. The patents are not all directly relevant to high-speed rail applications; however, they provide a picture of the current research directions with solutions that may in part be applied to high-speed rail.

In terms of overall bearing design, the main objective addressed by the novel designs are the reduction of bearing friction by optimising contact pressure and lubrication, whilst maintaining the manufacturing effort as low as possible.

Table 5. A selection of patents regarding innovations in bearing design (patent number and company in brackets).

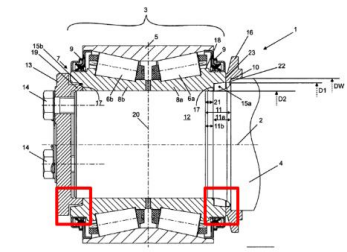

novel geometry of end-of-tapered region and bearing arrangement (DE102011004030, Schaeffler)

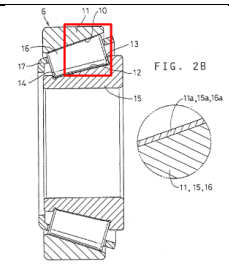

novel oil-lubrication, steel with low oxygen content, geometrical details (DE19956971, NTN)

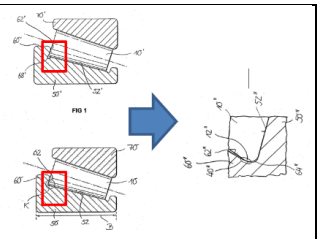

novel track element geometry (EP2126385, SKF)

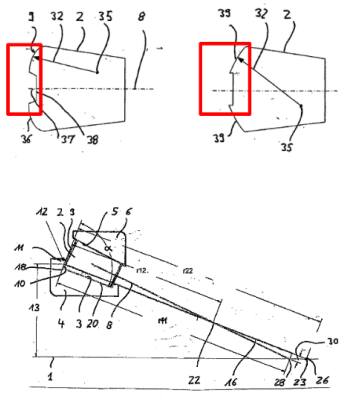

(WO10009689, Schaeffler) novel inner bearing ring lip surface, roller geometry, overall geometry

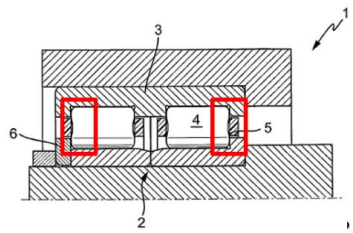

novel torus-convex front surface of rolling elements (EP2300725, Schaeffler)

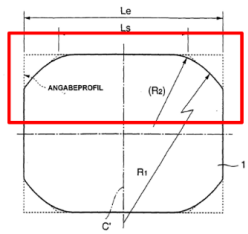

(DE10042901, NSK) "crowning" on roller side and on raceway surface of inner ring

(EP1722117 / EP1754900, JTEKT / Koyo) "crowning" of tapered rollers and raceways

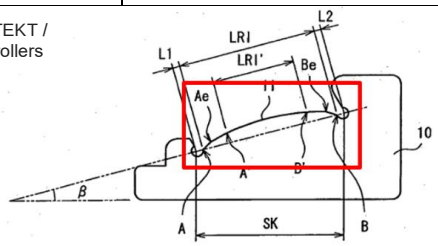

No major breakthroughs were detected, only incremental improvements of specific details.

Another more disruptive idea on which GEARBODIES Partner Schaeffler is currently working

is to use ball rollers for axleboxes, where up till now cylindrical or tapered rollers have been used due to the significant presence of axial loading in both directions, particularly when running on curved track. Ball rollers lend themselves to further reducing friction as they do not need a part in sliding contact and have potentially less contact area than the other rollers.

Given the apparent absence of major disruptive ideas for journal bearings in the scientific and technological community, it may be worthwhile to mention here some far-fetched thought-provoking ideas for further evaluation:

- lubricant condition monitoring;
- lubricant cooling system exploiting wheelset rotation;
- magnetic removal of ferritic material from the lubricant;
- bearings not (entirely) based on rollers: advanced friction bearings, non-contact bearings.

3.1.2. Materials for rail vehicle journal bearings

3.1.2.1. Materials for rollers and races

Steels for rollers and rings need to have specific properties. They have to be fatigue-resistant due to the cyclic nature of the stresses they are subjected to. High hardness is also needed to prevent wear, and high strength to support service loads. Cleanliness of the steel (low content of impurities) is also important to reduce the risk of cracks that might appear due to fatigue or overloading. These properties can be achieved through different combinations of base material (chemical composition) and heat treatment. Therefore, aside from specific requirements in deoxidation and heat treatment, steel design is usually left to the discretion of the manufacturers. Permitted bearing steel grades for railway applications are listed in ISO 683-17:2014, although alternative steel grades might be used for special applications. The most common steels for rollers and races for rail vehicle journal bearing are discussed below in sub-section §3.1.2.1.1.

In the meantime, recent research and emerging solutions for novel advanced materials that have good potential for being used for journal bearing races and rollers are presented further in sub-section §3.1.2.1.2.

3.1.2.1.1. Solutions available on the market

The preferred choices are through-hardened and case-hardened steel. Through-hardened steels have hardened microstructure distributed over the entire circumference and cross-section of the bearing component, whereas case-hardened steel involves an outer hardened layer and a tough soft interior. For high-speed and very high-speed applications, both through-hardened and case-hardened steel are used, depending on the application requirements. More details about these two materials, and typical values of various mechanical properties can be found in Table 6 and Table 7, respectively.

Table 6. Materials for bearing rollers and races currently available on the market. (from several references in the list).

Through-hardened steel
Chromium steel, usually with martensitic or bainitic heat treatment, 100Cr6 (SAE52100). Its typical chemical composition in mass percentage is 0.93 to 1.0 C, 0.15 to 0.35 Si, 0.25 to 0.45 Mn, 0.25 P, 0.015 S, 1.35 to 1.60 Cr, 0.10 Mo with traces of other elements such as Al, Ca, Cu, O and Ti. It is usually much cleaner and has less inclusions than case-hardened steels. Compared to martensitic hardened variations of the 100Cr6 steel, the bainitic treatment reduces the risk of cracking. It has a hardness of 62 HRC, offering a combination of wear resistance and very good overrolling resistance. It is versatile as it also offers good shock-type load conditions. Bainitic hardening steel can be used under operating temperatures up to 200 °C. Besides, through-hardened steel is widely available and offers good performance to price ratio, making it an attractive material. For applications like locomotives, multiple units, passenger coaches, mass transit vehicles as well as freight cars with closed axlebox designs, through hardened steel is widely used.
Case-hardening steel
Manganese-chromium alloy steel, e.g. 17MnCr5 (SAE5280), Mancrodur or higher alloy, carburised and martensitic hardened. 17MnCr5 has a chemical composition of 0.14 to 0.19 C, 0.40 Si, 1.00 to 1.30 Mn, 0.025 P, 0.015 S, 0.80 to 0.10 Cr with Al, Ca, Cu, O, Ti in lower quantities. Compared to bainitic hardening steel, case-hardening steel has higher resistance to fatigue and cracking, due to its hard surface layer (up to 65 HRC) and its tough core. It is suitable for operating temperatures under 120 °C. Carburised steel is usually preferred in applications where heavy shock loads are present or when there is risk of contamination of the lubricant. Carbonitriding heat treatment can also be used, which produces a fine distribution of spherical carbonitrides, reducing the formation of acicular carbide at grain boundaries that increase the risk of cracking. Carbonitrided steel is used in applications where extended service life under higher operating loads are needed such as in heavy duty freight traffic.

Table 7. Mechanical properties of steels for railway bearings.

Material	*Surface hardness (HRC)*	*L_{10} life[1] (h)*	*Yield Strength (MPa)*	*Tensile strength (MPa)*	*Charpy impact value ($J\ cm^{-2}$)*
Through-hardened steel	62	250	≥1176	≥1617	5-8
Case-hardened steel	65	300	--	≥980	≥59

[1]For 90% reliability at 12 000 rpm, P0=2900 MPa and κ =2.7.

3.1.2.1.2. Overview of recent and emerging material solutions for bearing races and rollers

The most promising new materials for rollers and bearings are discussed in this subsection. The shortlist of the most promising solutions includes:

- multi-principal element alloys (also known as high entropy alloys HEA);
- ceramics;
- thin film coatings (produced through, e.g., vapour deposition coating, powder metallurgy and high entropy alloy films);
- powder metallurgy technique; and
- advanced steel grades (upgraded variants of the steel grades presented in the previous sub-section).

While this review focuses on multi-principal element alloys and high entropy alloys, the other options are also discussed. An overview of the solutions listed above is presented in Table 8.

Multi-principal element alloys

The field of multi-principal element alloys (MPEAs), particularly high entropy alloys (HEAs), is currently one of the most intensely researched field in materials science. These types of materials are multicomponent alloy systems, usually involving 5 or more components, in which the high configurational entropy favours the formation of solid solutions (single or multiphase) over the formation of intermetallic compounds. The large number of element combinations implies not only that the number of possible systems is enormous, but also the freedom to tune compositions to achieve desired mechanical properties. Early work already showed the potential of this new type of materials. High entropy alloys with high wear (Hsu et al. 2004, Wu et al. 2006, Chuang et al. 2011) and fatigue resistance (Hempfill et al. 2012, Shukla et al. 2018, Liu et al. 2019), some even comparable with modern bearing steel, have been reported. As research explores this new realm of alloys and improves our understanding of it, mechanical properties of these new materials could be refined, expanding their range of applications. This makes MPEAs strong candidates for most engineering applications in the future.

MPEA/HEA Definitions

As in any new and intense field of research, definitions and terminologies are not well-established. The original definition in terms of composition defines HEA as alloys consisting of 5 or more principal elements, in which each of them can have concentrations between 5 and 35 at. (Yeh et al. 2004). This definition, however, does not consider any entropy boundaries, which motivated another widely used definition. In terms of entropy, alloys can be divided into three groups: low ($0.69\ R < S_{ss,ideal}$) medium ($0.69\ R < S_{ss,ideal} < 1.61\ R$) and high ($S_{ss,ideal} > 1.61\ R$) entropy alloys, where $S_{ss,ideal}$ is the ideal molar configurational entropy of the solid solution and R the gas constant. This definition also has its drawbacks as $S_{ss,ideal}$

changes with temperature, change which can be slight or significant for different systems. The existence of these and other definitions usually lead to disagreement on what can be considered a high entropy alloy. More controversy arises from the questions such as whether or not the term HEA should be restricted to only single-phase alloys, or if the actual entropy of the system should be used as opposed to the maximum configurational entropy of the system when using the entropy definition. Nevertheless, the common aspect of these definitions is that these alloys consist of several principal elements, as opposed to conventional alloys, with a single predominant element and small amounts of other element impurities.

Sometimes, the term HEA is used specifically to refer to single-phase alloys, whereas terms such as multi-principal element alloys (MPEAs), complex concentrated alloys (CCAs), and baseless alloys are usually used interchangeably to refer to hyper-dimensional alloys without excluding some possible alloy systems which do not require the above criteria. In this review, the term HEA will be reserved for those alloys containing disordered solid solutions (single or multiple phase) consisting of at least 5 principal elements. The terms MPEA and CCA will be used to refer for those alloys with at least 5 principal elements regardless of the phases present in their microstructure.

While multi-component alloy systems such as stainless steels and superalloys have been widely used for engineering applications, they are different from MPEAs. Stainless steels usually consist of a predominant element, iron, with enough addition of secondary elements that function as phase stabilisers (e.g. Ni, Mn and N for austenitic and Cr for ferritic steels) and other elements in lower concentrations to tune mechanical properties. Similarly, superalloys have one or two principal elements (e.g. Ni, Ni-Fe or Co) and properties are tuned with additions of other elements such as Cr, Al, Ti. While these alloys are multi-component, they differ from MPEAs in that most of the components of the latter are present in high concentrations, sometimes equimolar. Some HEAs are seen as extensions of stainless steels or superalloys, and they usually serve as comparison, but this new type of materials is much broader.

Background research on HEA

Research on the field started with a series of publications in 2004 (Cantor et al. 2004, Chen et al. 2004, Hsu et al. 2004, Huang et al. 2004, Yeh et al. 2004). While the initial goal of the work done by Cantor (2004) was to “to investigate the unexplored central region of multicomponent alloy phase space”, the following papers pursued solid solution stability via high configurational entropy. More recently, the presence of intermetallic (IM) phases was observed in some of these alloys and it was found to have important effect of mechanical properties. IM phases, which are usually avoided in conventional alloys, showed that they can be useful in modifying mechanical behaviour. This finding required to revisit some of the metallurgy concepts that are well-established for conventional alloys and to find out if they are applicable to HEAs.

This new approach in alloy design, which can be seen in Figure 4, led to the creation of high

entropy alloys in which new phenomena, not seen before in conventional alloys, were observed. The so-called 'core effects' include the high entropy, lattice distortion, sluggish diffusion and the cocktail effect and were proposed to explain early experimental observations in HEAs.

High entropy - this hypothesis, from which these alloys take their name, states that the high configurational entropy of nearly equimolar multi-component alloys favours the formation of disordered solid solutions and suppresses the formation of intermetallic phases.

Severe lattice distortion - the difference in atom sizes in crystalline HEAs result in important lattice distortion. This distortion, much more significant than in conventional alloys, is claimed to result in lower intensity X-ray diffraction peaks, increased hardness, reduced thermal and electrical conductivity as well as the weak temperature dependence of these properties (Yeh et al. 2004, Yeh 2006, Murty et al. 2019).

Sluggish diffusion - reduced diffusion, which was attributed to the large fluctuations of lattice potential energy between lattice sites, was also observed (Tsai et al. 2013). Lattice sites with low potential energies can function as 'traps' for diffusing atoms, leading to the sluggish diffusion effect.

Cocktail effect - this effect has its name from an analogy made by Ranganathan (2003) to describe the enhancement of properties due to the multiple-way interaction of the phases that constitute the alloy. HEAs usually show properties that are not shown in any of their base elements which result from their synergy. Deep understanding of these unexpected effects is important for good design of HEAs.

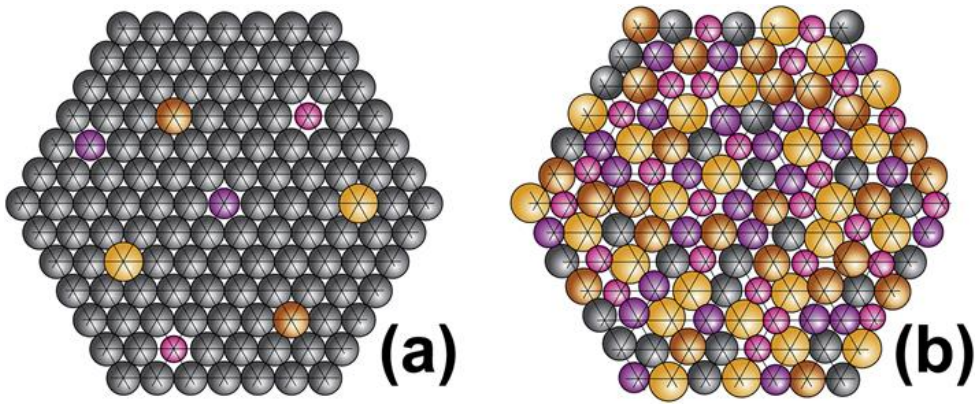

Figure 4. a) Conventional alloy: single main element with small amounts of alloying elements. b) MPEAs: 5 main elements in near equimolar concentrations (Miracle & Senkov, 2017)

HEA Advantages

Being new materials, the applicability of MPEAs to different engineering applications depend upon the advantages that they could have over already well-established materials. Considering the 100Cr6 steel grade as benchmark for bearing races and rollers material,

some advantages can be envisaged.

Microstructure stability - bearing steels achieve their hardness through heat treatments, e.g. carburising, quenching and tempering that produce hard microstructures such as martensite and bainite. Martensite is metastable which means that relatively small environmental changes can cause changes in its structure. Due to the cyclical stress to which bearing components are subjected to, C can diffuse out from martensite to form carbides. This phenomenon is called martensite decay (Swahn et al. 1976) and is one of the main causes of rolling contact fatigue in bearing and gears (Fu & del-Castillo 2018, Oila et al. 2005). HEAs, due to the multi-core effect, have been observed to have 'sluggish' diffusion (Tsai et al. 2013), which suggests that diffusion driven phenomena such as martensite decay, will have reduced impact on microstructure stability, resulting in longer fatigue life.

Higher hardness - several MPEAs have been reported to have high hardness, especially those consisting of 3d transition metals and refractory metals. The former is particularly attractive due to its wide availability. Some examples of these alloys are the $Al_xCoCrCuFeNi$, $AlCoCrFe_xMo_{0.5}Ni$ and CoCrFeMnNi alloy systems. Hardness can be achieved by a number of processing methods and by tuning the content of its components. For instance, the hardness of $Al_XCoCrCuFeNi$ has shown to be very susceptible to additions of Al, increasing with the Al concentration due to a phase transition from face-centred cubic (FCC) to body-centred cubic (BCC). Single-phase BCC HEAs are generally more than 400 Hv harder than FCC HEAs. As the Al content is increased, a dual-phase FCC+BCC alloy is formed with hardness values between the FCC and BCC phases, depending on the volume fraction of both phases. These types of alloys have been reported to achieve hardness levels comparable to those of bearing steels. As-cast $Al_{0.3}CrFe_{1.5}MnNi_{0.5}$ has shown hardness levels as high as 800 Hv (Tang et al. 2009). As advances in microstructural refinement continue, these values are likely to increase. For instance, nitrided $Al_{0.5}CrFe_{1.5}MnNi_{0.5}$ alloys have been reported to have hardness higher than 1000 Hv (Tang et al. 2010).

Wear resistance - several MPEAs have been reported as having higher wear resistances than steel. It was demonstrated that the wear resistance of the $Co_{1.5}CrFeNi_{1.5}Ti$ and $Al_{0.2}Co_{1.5}CrFeNi_{1.5}Ti$ alloys is at least two times higher than that of conventional wear-resistant steels with similar hardness (Chuang et al. 2011). Numerous studies in similar MPEAs showed similar trends, especially in the CoCrFeMnN alloy system. The good wear resistance of this alloy system has also been observed to be accompanied with good thermal stability (Joseph et al. 2020, Xiao et al. 2020).

Extended Fatigue life - the fatigue behaviour of 3d transition metal MPEAs have been widely studied. Some alloys systems such as the FeMnCoCrSiCu (Lui et al. 2019) and the $Al_{0.5}CoCrCuFeNi$ (Hemphil et al. 2012) have shown excellent fatigue strength, reaching values as high as 900 MPa. Furthermore, other MPEAs have shown excellent resistance to fatigue crack growth. As cast $Al_{0.5}CoCrCuFeNi$ and $Al_{0.2}CrFeNiTi_{0.2}$ have been reported to have fatigue thresholds higher than 15 MPa $m^{1/2}$ (Seifi et al. 2015). If compared with fatigue strength thresholds reported for 100Cr6 steel, around 600 MPa and 4.5 MPa $m^{1/2}$ (Xue et

al. 2018, Spriestersbach et al. 2014), important advantages in the favour of the MPEAs can be recognised.

It is clear that, since the field of MPEAs and HEAs is in its early stages, the room for improvement is encouraging. Great effort is being devoted to understanding the relationship between the microstructure and the mechanical properties. As progress is made, more effective material design will allow for more suitable materials for engineering applications, including high-hardness and fatigue resistant bearing components.

Ceramic materials

Although ceramic materials have mainly been used for specialised bearing applications, such as for high temperature, corrosive environments and high speed, their use has spread to other areas in the past decade. New ceramic materials consisting of Si_3N_4, ZrO_2 and Al_2O_3 have shown mechanical properties that surpass those of steel. Generally, these ceramic materials have high wear, temperature and corrosion resistance as well as being non-magnetic and having low density (about 40% of that of bearing steel), small thermal expansion coefficient (about 25 % of that of bearing steel) and large elastic modulus (about 1.5 times that of bearing steel) (Qui et al. 2017). Bearings made of ceramics are very suitable for operation under these high speed, high temperature, corrosive conditions, as well as under other special environmental conditions. On the other hand, some of the disadvantages of ceramics are the high cost, the difficulty to achieve precise roundness and their lower load ratings, due to their inferior toughness and impact resistance (Sun et al. 1998, Becher et al. 1998). Because of this, ceramic bearings have not been developed so far for rail vehicle journal applications.

Hybrid (steel and ceramic) bearings are used as alternatives to steel bearings in some applications such as for high speed and high temperature. Therefore, they are widely used in traction motors. They are useful when problems with a lack of lubricant occur, which may be due to starvation effects. Friction in ceramics and ceramic/steel combinations is low, so it is possible to improve bearing lifetime by using ceramics. Aside from those scenarios, ceramic bearings are advantageous when there is a risk of electrical current passing through, which can result in electrical erosion.

Thin Films and Coatings

Thin film hard coating has been considered a viable alternative to enhancement of base material properties for several applications. Corrosion damage and fretting corrosion can be mitigated by the use of coatings (e.g., chromate passivation, zinc phosphate coating, chromium coatings). Other coatings are applied to the raceways in order to reduce friction in rolling bearings. Furthermore, Physical Vapour Deposition (PVD) coatings can be used to increase hardness, wear and fatigue resistance in bearings. Inexpensive bearing steel, or other materials capable of supporting operative loads, can be covered with coating through different techniques such as PVD, Thermal Spray (TS) or Chemical Vapour Deposition (CVD). The materials used for coatings are special alloys (high entropy alloys), ceramics

and cemented carbides to provide significant enhancement in the tribological properties of bearings. The performance of the coating depends on the whole tribological system and in many cases, when paired with steel components, lifetime and tribological response is improved (Klaffke et al. 2005).

PVD Coatings

Physical vapour deposition is one of the most widely used coating methods, as it has been shown to withstand higher shear stresses than other techniques (Steward and Ahmed 2002). Figure 5 shows a schematic representation of the PVD process in which metal is vaporised and deposited on electrically conductive materials to produce thin coatings. PVD methods use clean and dry vacuum deposition, in which the coating is deposited over the entire object simultaneously, rather than in localised areas. TiN, TiAlN, TiC, CrN, and Diamond-Like Carbon (DLC) coatings, produced by PVD (Borgaonkar & Syed 2020, Vereschaka et al. 2018, Chen et al. 2019), have already been studied in rolling contact fatigue tests, improving the lifetime of the components. DLC and Carbon Nitride (CN) coatings are considered good candidates for use in rolling components as they provide low friction and high wear resistance. Chromium aluminium nitride PVD coatings have also shown improved fatigue and wear resistance when applied to thrust bearings (Bobzin et al. 2004).

Although achieving high hardness and long fatigue life is not uncommon for these materials, obtaining both simultaneously is difficult. Furthermore, while improvements are being made, achieving film thickness uniformity remains one of the main challenges, especially for bearing rollers (Drory and Evans 2011). Thickness uniformity is important to ensure the desired mechanical properties are obtained. Some of these drawbacks are avoided with the introduction of new high entropy alloy films.

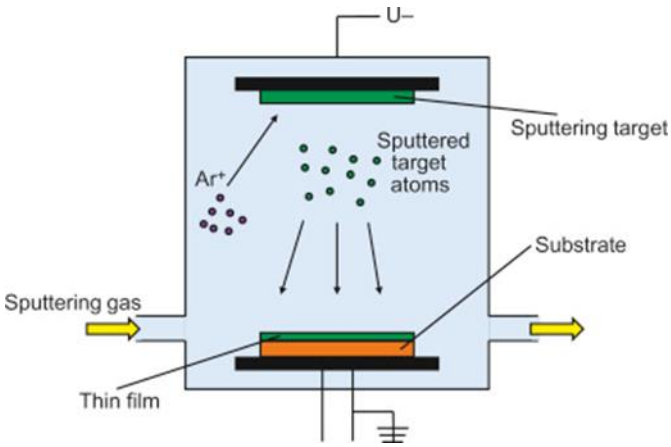

Figure 5. Illustration of the physical vapour deposition process (Faraji et al. 2018)

High Entropy Alloy Films

After their recent discovery, high entropy alloys have become one of the most researched coating materials due to their immense number of component combinations and the good

mechanical properties they have shown. The application of conventional film and coating materials are greatly limited by a hardness-fatigue trade-off. However, new high entropy alloy films (HEAF) might offer a solution to this. Studies in 3d transition metal HEA have shown that nano-twins form during deformation, resulting in high hardness, high fatigue life and good strength; a set of properties that is difficult to achieve simultaneously (Wang et al 2019). Recent CoCrFeMnNi HEAF have shown both high hardness and high fatigue life (Wang et al. 2020). A synergy between strain hardening and the de-twinning mechanism is responsible for this. Increased fatigue life is achieved by increasing the thickness of the film, which has no impact on hardness, hence achieving hardness and fatigue life superior to 8 GPa and 1.5 million cycles. The work done by Wang et al. is encouraging as it demonstrates that the exotic properties of these new materials can be used in situations where conventional materials struggle. HEAF should be considered potential candidates for future bearing components.

Powder metallurgy

Powder metallurgy (PM) is a metal-forming technique that uses powders (metallic and/or ceramic) as raw materials that are formed into a specific shape and dimensions and subsequently sintered at high temperature. The main advantage of using PM materials for bearings is the high precision of the metal-forming and great machinability. The use of PM techniques has been somewhat limited due to the high cost of some of the powder materials and the difficulty to control the levels of inclusions, which can result in poor mechanical response. PM materials are porous and mechanical properties are closely related to the level of porosity. High strength, hardness, toughness can be achieved by increasing the density of the material. Achieving fatigue resistance is more complicated as fatigue crack growth is reduced with increasing porosity while the endurance limit increases with density. However, recent advances in PM research suggests that a set of good mechanical properties can be achieved which can make these materials useful for bearings applications. For instance, the PM ASP®2055 (Sidoroff et al. 2017) have shown very high hardness levels (68 HRC) paired with good toughness and fatigue life. This is achieved due to high intrinsic micro-yield stress of the matrix and the presence of mixed oxide inclusions, leading to limited stress concentrations.

Other PM materials that have been used in bearings are iron–nickel alloys (alloy 52) which has high hardness (50–57 HRC), excellent resistance to high temperature corrosion, radiation protection and is antimagnetic. MT35 and ST35 are composite materials with 35% TiC and 65% chromium molybdenum tool steel powders, 35% TiC and 65% nickel chromium stainless steel powders, obtained through the pressed sintering process (Chen et al. 2010). They have high hardness, high wear resistance, good machinability, and better dimensional stability. Powder metallurgy ceramic materials include the pure Al_2O_3, Si_3N_4 and ZrO_2 crystallite ceramics. These ceramics have much higher hardness, low relative density, good high-temperature behaviour, good wear resistance, high machining precision, and good accuracy stability. They are usually suitable for high-speed applications (Qui et al.

2017).

Table 8 summarises the solutions discussed in this sub-section, considering also potential advantages and disadvantages that would be enabled by the implementation of these solutions.

Table 8. Summary of potential emerging solutions for enhanced journal bearing rollers and races.

Material/ solution	Examples	Advantages	Disadvantages
Multi-Principal Element Alloys MPEA (includes HEA)	$Al_xCoCrCuFeNi$, CoCrFeMnNi, FeMnCoCrSiCu	• Large number of possible combinations to tune properties. • High hardness paired with long fatigue life. • Microstructural stability due to sluggish diffusion.	• Extensive R&D work needed to achieve microstructural control.
Ceramics	Si_3N_4, ZrO_2, Al_2O_3	• High wear, temperature and corrosion resistance. • Non-magnetic, low density. • Thermally stable. • High Young's Modulus.	• Reduced toughness. • High cost.
Physical Vapour Deposition (PVD) coatings	Diamond-like coatings (DLC)	• High corrosion resistance. • Low friction. • Reduced cost.	• Thickness uniformity • Hardness-fatigue trade-off difficult to be achieved.
High Entropy Alloy Films (HEAF)	CoCrFeMnNi	• All those of MPEAs. • Reduced cost.	• Extensive research needed.
Powder Metallurgy (PM)	PM ASP®2055	• Very high forming precision. • High hardness and fatigue resistance.	• Higher cost • Difficult to control inclusion levels

3.1.2.2. Materials for cages

3.1.2.2.1. Solutions available on the market

Polymer based bearing components are important since they can be utilized in destructive environments. Often, the medium acts as a lubricant. Polymers are five times lighter than steel, reducing the weight and energy required to move them and lost because of friction since such bearings can demonstrate low friction coefficient without lubrication. It is possible to develop and produce special designs from polymers, readily and inexpensively. Also, polymeric materials have the inherent ability to dampen vibrations since when polymer bearings are lubricated, they become virtually silent. This is because polymers

absorb shock loads better than metal (Rymuza, 2013).

3.1.2.2.2. Effect of lubricant on ageing of polymers

Two physical-chemical processes may affect polymeric materials in the presence of lubricants leading to ageing effects (Robert et al., 2006):

Swelling

The swelling of certain polymers caused by lubricants is mainly influenced by the crystallinity and the polarity of the polymer. As far as the base oil is concerned, the polarity and the viscosity are of importance. In general, an engineer has the polarity in mind. Thus, the swelling effect is not often a problem, but some constructions use incompatible polymers or elastomers. This makes estimation very difficult in some cases (e.g. EPDM-rubber/polycarbonate). Concerning the crystallinity of a polymer, a general rule of thumb is the higher the crystallinity, the higher the resistance to swelling. However, this only applies when one polymer is considered. Apart from the polarity and the crystallinity, the viscosity of the base oil has a strong influence on the swelling behaviour. Oils with a low viscosity usually contain small molecules which generally have a greater tendency to penetrate into the surface of the polymer. In this context, mineral oils generally show a broad molecular weight distribution, therefore the content of low molecular weight components is rather high, compared to synthetic oils, which tend to have a greater proportion of higher molecular weight components.

Oxidation

Degradation and stabilization of polymers have been discussed intensively in the literature, and it is conceivable that this topic will continue to be of interest in the future. The synthesis of new technical polymers is often intended to improve their thermal and mechanical properties. In tribological systems, very often polyamide (PA) 66 is used. This material mainly shows ageing which leads to an embrittlement of the surface. The oxidative attack of the PA 66 dominates in the first 500 μm of the surface and the process proceeds via the formation of hydroperoxides. To enhance the durability of PA for applications at higher temperatures, say 120°C, a comparatively large amount of antioxidants (AOs) must be added to the polymer. Primary and secondary AOs are used to increase the thermal and oxidative resistance. The primary AOs (e.g. hindered phenols or amines) deactivate the radicals which originate in the radical-chain mechanism. Secondary AOs decompose or block radical donating intermediates such as peroxides (e.g. phosphate, phosphonite and thioether), metals (e.g. triazole derivates, metal deactivators) or UV irradiation (e.g. graphite). Primary and secondary AOs show a synergistic effect, as they engage at two different steps in the ageing process. The kinetics for the oxidation processes are influenced by the crystallinity of the polymer. Amorphous regions in the polymer deteriorate more rapidly. A summary of current cage materials is presented in Table 9.

Table 9. Cage materials: main solutions on the market.

MATERIALS FOR CAGES (SKF, 2021)
Phenolic resin
Cotton fabric reinforced phenolic resin is a lightweight material. Cages made of this material can withstand heavy inertial forces and operating temperatures up to 120 °C (250 °F). The material tends to absorb oil, assisting the lubrication of the cage / rolling element contact and providing a safety margin for run down, should there be an interruption of lubricant supply. Cotton fabric reinforced phenolic resin is a standard cage material for most super-precision angular contact ball bearings.
Polyamide 66
Polyamide 66 (PA66), with or without glass fibre reinforcement, is characterized by a favourable combination of strength and elasticity. Due to its excellent sliding properties on lubricated steel surfaces and the superior finish of the contact surfaces, PA66 cages reduce friction, frictional heat, and wear. PA66 can be used at operating temperatures up to 120 °C (250 °F). However, some synthetic oils and greases with a synthetic oil base and lubricants containing EP additives, when used at high temperatures, can have a detrimental effect on PA66 cages. PA66 is a standard cage material for many super-precision cylindrical roller bearings and angular contact thrust ball bearings.
Polyamide 46
Polyamide 46 (PA46) has the same excellent material properties as those of PA66. Glass fibre reinforced PA46 has a higher permissible operating temperature than glass fibre reinforced PA66 and can therefore be used at operating temperatures up to 135 °C (275 °F). However, as with PA66, some synthetic oils and greases with a synthetic oil base and lubricants containing EP additives, when used at high temperatures, can have a detrimental effect on PA46 cages.
Polyetheretherketone
Glass or carbon fibre reinforced polyetheretherketone (PEEK) is popular for demanding applications where there are either high speeds or high temperatures or a need for chemical resistance. The maximum temperature for high-speed use is limited to 150 °C (300 °F) as this is the softening temperature of the polymer. The material does not show signs of ageing by temperature or oil additives up to 200 °C (390 °F). PEEK is a standard cage material for some super-precision angular contact ball and for high-speed design cylindrical roller bearings.
Brass
Brass is unaffected by most common bearing lubricants, including synthetic oils and greases, and can be cleaned using normal organic solvents. Brass cages can be used at operating temperatures up to 250 °C (480 °F). Machined brass cages are used in several super-precision double row cylindrical roller bearings and double direction angular contact thrust ball bearings and are standard for large super-precision angular contact ball bearings (d ≥ 300 mm).
Other cage materials
In addition to the materials described above, Bearings for special applications can be fitted with cages made of other engineered polymers, light alloys or silver-plated steel.

3.1.2.2.3. Recent and emerging solutions

Emerging solutions concerning polymeric materials with improved mechanical and tribological properties for cages have been directed towards the development of polymeric based nanocomposites. Inorganic filler particles enhance the mechanical and tribological properties of polymers. The stiffness, toughness, and wear performance of the composites are extensively determined by the size, shape, volume content, and especially the dispersion homogeneity of the particles (Wetzel et. al., 2002). Some emerging cage material solutions are summarised in Table 10.

Table 10. Cage materials: main recent and emerging solutions.

POLYMER COMPOSITES WITH IMPROVED ABRASION RESISTANCE
Polymer composites for tribological applications: polymers, fillers, process and testing methodology
(Friedrich et al., 2018) Most common polymer matrix for cages: Phenolic resin, PA66 (with and without GF), PA46 with GF, PEEK, brass. Most common fillers used: - Inorganic nano-particles to improve wear performance with a filler content between 1-6 vol%: Al_2O_3, TiO_2 ZnO, CuO, SiC, ZrO_2, Si_3N_4, SiO_2 and $CaCO_3$ - GF, CF, short CF, CNT, graphene nanoplatelets. Addition of nano-fillers results in better properties in comparison with micro-fillers. In this regard, a good dispersion of the filler is key to ensure good properties.
PEEK
This polymer has high Tg (143ºC) and high melting point (343ºC) which makes it ideal for tribological applications. However, it also has poor wear resistance. To enhance its properties, different fillers can be added. Short carbon fibers are used to improve wear resistance.
(Zhong et al., 2011) PEEK/SCF/ZrO2 composites under aqueous conditions. The wear resistance is reduced because the carbon fibers carry the load between the contact surfaces and protects the polymer matrix. ZrO2 inhibit SCF failure reducing the stress concentration on the CF interface and lowering the shear stress between the sliding surfaces.
(Werner et al., 2004). PEEK/CNF composites produced by injection moulding unidirectional sliding tests on stainless steel showed reduction in wear rate. The CNF acts as a solid lubricant and increase strength of the PEEK.
(McCook et al., 2007) PEEK with different carbon-based micro and nanofillers in different conditions (nitrogen atmosphere and open air). The coatings more wear resistant had lower friction coefficient in nitrogen. But in open air the friction coefficient was higher.
(Hou et al., 2008) PEEK/WS2 fullerenes. The lubricating capability of the nanofillers decrease the friction coefficient to a third of its original value.
(Zhang et al., 2008). PEEK/SiO2 nanoparticles produced by means of ball milling technique. 1 vol% of filler contents showed to reduce the perpendicular deformation of PEEK and smoothing the PEEK surface.

(Zhang et al., 2009) PEEK/SiO2 compounded with SCF/PTFE/graphite. The SiO2 nanofillers reduce the friction coefficients and the SCF served as protection to the interface of the nanoparticles.
PTFE
PTFE presents good tribological properties (low friction, high melting temperature and chemical inertness) but poor wear resistance.
(Wang et al., 2014) Combined effects of fiber/matrix interface and water absorption on the tribological behaviors of water-lubricated polytetrafluoroethylene-based composites reinforced with carbon and basalt fibers.
(Vail et al., 2009) PTFE/CNT composites showed improvement of wear resistance and friction coefficient.
PA
Usually combined with fillers such as CuS, CuF2, CuO, PbS, CaO, CaS and CF.
(Meszaros et al., 2016) low-cycle fatigue properties of basalt fiber and graphene reinforced polyamide 6 hybrid composites
(Quagliato et al., 2020) The influence of fiber orientation and geometry-induced strain concentration on the fatigue life of short carbon fibers reinforced polyamide-6
(Garcia et al., 2004) Nylon 6/nanoSiO2 composite shown a reduction in the coefficient of friction and wear rate due to the creation of a transfer film on the surface of the metal counterface.
(Zhou et al., 2018) PA6/BF/Graphene produced by coating of the basalt fibers by dipping them in graphene and then the composites were produced by extrusion and injection moulding. Compared with BF/PA6, the GR-BF/PA6 composites obtained a fairly low friction coefficient and highly wear-resisting property, which was explained by the improved interfacial adhesion, effective stress transfer and the highly unfolded feature and flexibility of the introduced GR.

3.1.3. Lubricants and lubrication solutions for rail vehicle journal bearings

3.1.3.1. Lubrication

The main purpose of the lubricant is to provide a lubricating film that prevents direct contact between the rolling elements, raceways and cage, so that friction and wear are minimised. By reducing friction, temperature is kept within design levels. Furthermore, lubricants also protect the bearing from corrosion and prevent contaminants from entering. Other benefits of good lubrication are noise and vibration reduction, shock-load absorption and extended fatigue life. Incorrect lubrication will undoubtedly result in bearing damage and reduced lifetime. Some common lubricant failure induced damages are surface initiated fatigue and wear that result in visible damage such as cracking and spalling.

3.1.3.1.1. Lubricants

The most important property of a lubricant is its viscosity, as it is closely related to the protective film thickness that the lubricant can form. Moreover, there are other factors to take into account when selecting a lubricant, such as temperature, speed, load and bearing material used. Lubricants can be liquid, solid, gas, or semi-solid. Liquid lubricant is oil lubrication, while semi-solid is grease with ointment state under the normal temperature. Commonly, grease is preferred in rolling bearings although oil and solid lubricant solutions might be adopted under special conditions.

Oil lubrication

By far, petroleum or mineral oil is the most widely used lubricant material. Oil lubricants consist essentially of hydrocarbons ranging in molecular weight from approximately 250 (with 18 carbon atoms), for low-viscosity lubricants, up to 1000, for very high-viscosity lubricants. For a given molecular size, paraffins have relatively low viscosity, low density, and higher freezing temperatures (pour points). Aromatics involve six-member unsaturated carbon rings, which introduce higher viscosity, more rapid change in viscosity with temperature, and dark-coloured, insoluble oxidation products, which are the source of sludge and varnish that accompany their oxidation in high-temperature service.

Aside from lubrication, mineral oils also provide cooling, corrosion protection, sealing, cleaning and buffering. Lubricant oils consist of a base and additives. The base oil is the main part of the lubricant as it determines basic properties. Additives are used to enhance performance and are useful to reduce the amount of base oil needed to achieve required properties. Although base oil can be either mineral or synthetic, the former is normally preferred. Additives are an important part of lubricant design, as correct selection can provide improved physical and chemical characteristics and enhanced performance. Common additives include viscosity index improver, pour point depressant, antioxidant, dispersant, friction moderator, oiliness agent, extreme pressure agent, anti-foaming agent, metal passivating agent, emulsifier, anti-corrosive agent, anti-rust agent, demulsifying agent.

Grease lubrication

Greases are made by thickening base oils, usually with gelling agent such as metallic soap and non-metallic powder. Due to their design simplicity, high sealing performance and low need of maintenance, greases are the preferred form of lubrication in rolling bearings for a number of applications including railways. They are also commonly used in low-speed slide bearings and gears. The thickener helps the oil component to form the lubricating film between the contact elements.

Mineral oils are the mostly used base materials in greases and have 100–130 cSt viscosity at 40°C (Khonsair & Booser, 2017). Oils in this viscosity range provide low volatility for long life at elevated temperatures, together with sufficiently low bearing torque for use down to sub-zero temperatures. Higher-viscosity oils, up to the 450–650 cSt range at 40°C, are

employed for special greases formulated for high-temperature and for compounding with extreme pressure additives in greases for high-contact stresses at relatively low speeds. Less viscous oils, ranging down to about 25 cSt at 40°C, are used in special greases for low temperatures and for low torque in some high-speed equipment. Maximum tolerable oil viscosity in a grease at winter temperatures is about 100,000 cSt for starting medium-sized equipment using ball bearings.

Gelling agents used include fatty acid soaps of lithium, calcium, aluminium, and sodium in concentrations of 6–20 wt%. Lithium soaps are mostly preferred. Fatty acids employed are usually oleic, palmitic, stearic, and other carboxylic acids obtained from tallow, hydrogenated fish oil, and castor oil. The relatively low upper temperature limit of 65–80°C of traditional simple-soap calcium and aluminium greases can be raised to the 120–125°C range with new complex soaps. Calcium complex soaps, for instance, are prepared by reacting both a high molecular weight fatty acid such as stearic and a low molecular weight acetic acid with calcium hydroxide dispersed in mineral oil.

Solid lubricants

Solid lubricants provide thin films of a solid between two moving surfaces to reduce friction and wear and are typically used for high-temperature applications in aerospace, vacuum, nuclear radiation, and for other environments not tolerated by conventional oils and greases. Of the wide range of solid lubricants, the more common types include inorganic compounds and organic polymers, both commonly used in a bonded coating on a metal substrate, plus chemical conversion coatings and metal films.

3.1.3.1.2. Lubrication regimes

Lubrication in bearings might take place in different ways. Ideally, the lubricant should keep both the rolling element and the raceways separated, which is referred to as ***full-film lubrication***. However, this is not always the case, especially when transitioning from a standstill state to an operative state, when contact between the surfaces might occur, leading to poor lubrication. Figure 6shows a typical Stribeck curve, i.e., a visual representation of different lubrication regimes. The Stribeck curve correlates the friction coefficient with the Hersey number, $\mu N/P$, where μ, *N and P* are the dynamic viscosity, rotational speed and bearing load, respectively. Three main lubrication regimes can be defined, as shown in Figure 6, namely, the full-film (hydrodynamic), the mixed, and the boundary lubrication regimes. Each regime has applicability in different tribological systems. Steady-state operation of rolling bearings occurs under a specific type of full-film lubrication, the elasto-hydrodynamic lubrication regime. An overview of these lubrication mechanisms is presented in Table 11.

Figure 6. Schematic of Stribeck curve (Wang and Wang, 2013).

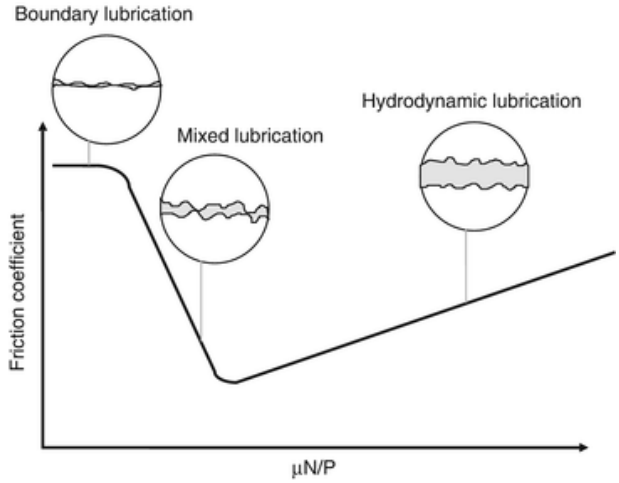

Several lubrication-related parameters are highly relevant and, therefore, used when predicting the fatigue and other sources of damage, such as the film thickness, specific film thickness and the friction coefficient. The specific film thickness λ is the main factor when predicting surface fatigue life. It is defined as

$$\lambda = \frac{h_{min}}{R_q}$$

where h_{min} is the minimum lubricant film thickness, R_q is the composite roughness given by:

$$R_q = \sqrt{R_{q1}^2 + R_{q2}^2}$$

with R_{q1} and R_{q2} being the root mean square (RMS) roughness values of the individual surfaces.

Full film lubrication

In full film lubrication, the lubricant fully supports the load so that the surfaces in motion are completely separated. In this regime, the lubrication takes place in two forms: hydrostatic and hydrodynamic. In the former, the lubricant is pressurised externally, usually by a pump. Typical film thickness can reach 100 μm and is maintained even at zero speed, so long there is continuous supply of pressurised lubricant. In hydrodynamic lubrication, the relative motion of the surfaces increases the lubricant pressure via viscous drag. Depending on the mechanism, it is possible to further classify full film lubrication into hydrodynamic and elastohydrodynamic lubrication (EHL). The thickness of the lubricant film is in the order of magnitude of 1 to 100 and 0.01 to 10 μm, for hydrodynamic and elastohydrodynamic lubrication respectively.

Hydrodynamic lubrication

In hydrodynamic lubrication, hydrostatic pressure within the lubricant separates the two surfaces. There are three main requirements for hydrodynamic pressure to be formed,

namely: i) the relative motion of the surfaces, ii) the convergence of the surfaces (the apparent area is large), and iii) the existence of a viscous fluid between both surfaces. In the example shown in Figure 7, as the top surface move by sliding on its own plane relative to the lower one, the lubricant is dragged in the direction of the motion to the converging gap. The pressure at this narrow gap is high so that the separation between surfaces is maintained. The hydrodynamic pressure is low compared to the strength properties of the solids and will not cause appreciable local deformation. The condition of hydrodynamic lubrication is governed by the bulk physical properties of the lubricant, mainly by the viscosity, and surface effects are negligible.

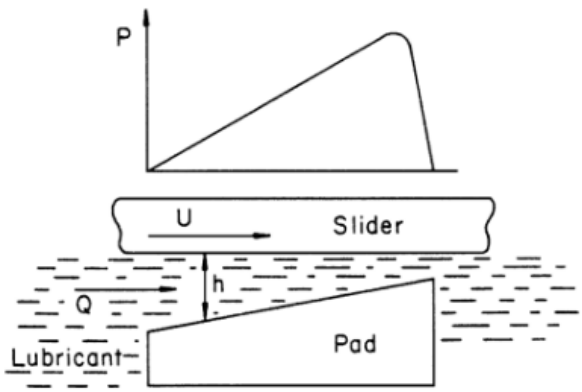

Figure 7. Hydrodynamic lubrication (Szeri, 2010).

Elastohydrodynamic lubrication

Elastohydrodynamic lubrication (EHL) is the hydrodynamic lubrication between elastically deforming solids. The local elastic deformation of the solid components provides a coherent hydrodynamic film, which prevents metal-to-metal contact of the surfaces. EHL is illustrated in Figure 8. When the lubricant enters the contact area between two rotating metal objects, the pressure increases sharply, opposing the contact of the two surfaces. The high pressure increases the viscosity of the lubricant and increases its capacity to support load. Elastic deformation of the rolling element and raceways takes places as the lubricant cannot be displaced due to its enhanced viscosity. Once the elastically strained material abandons the contact zone, it recovers its normal form without any permanent damage and rotation continues.

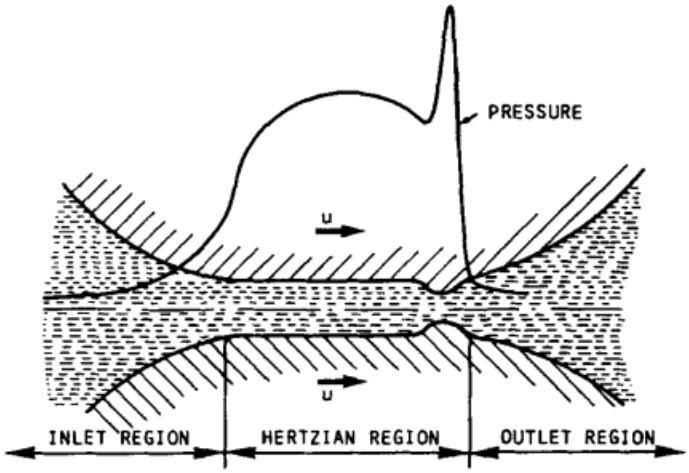

Figure 8. Elastohydrodynamic lubrication (Holmberg and Matthews, 1994).

If the Young's modulus of the contacting material is high, as it is in the case of steel, large pressure will be generated in the contact region. However, this does not result in the oil film being squeezed between the surfaces making contact because the viscosity of the lubricant increases exponentially with pressure, becoming extremely thick at the contacting point. Furthermore, the lubricant passes very quickly through the contact region, usually in milliseconds, so that there is not enough time to allow deformation of the lubricant film for metal-to-metal contact.

The basic requirement for elastohydrodynamic lubrication is rolling motion between moving elements with low conformity contact. A roller moving along the raceway is a clear example of this as the curvatures of the rolling element and of the raceways are very dissimilar. The contact in a rolling bearing occurs in one point or along a line, for a ball or a cylindrical/tapered rolling element, respectively. The contacting region is referred to as the Hertzian region because the pressure distribution is close to a Hertzian pressure distribution, except for pressure peaks at the inlet and outlet of the lubricant.

Boundary Lubrication

Boundary lubrication takes place when the lubricant cannot separate both surfaces, leading to asperity contact. Typical lubricant film thickness under this regime is between 0.005 and 0.1 µm. The load in this regime is mainly supported by contacting asperities, which results in friction that generates heat. Boundary lubrication is in general an inefficient form of lubrication. The generated heat can cause both adhesive and abrasive wear, resulting in visible surface damage. A less harmful form of boundary lubrication takes place when a boundary layer forms from the interaction between the surface and the lubricant. Additives in the lubricant can help to form this boundary layer through chemical reactions with the surface and the lubricant, and can reduce direct contact of the asperities and wear. Most of the wear generated during normal operation of the bearing occurs through this mechanism, during start-up and shutdown.

The main factor affecting boundary lubrication is the viscosity of the lubricant. Insufficient viscosity will result in extended boundary lubrication since the lubricant is easily displaced at the contact region. On the other hand, excessive viscosity will result in higher friction and energy losses. Therefore, lubricant viscosity is an important parameter in the selection of the lubricant. Another method of reducing boundary lubrication is the use of additives. Additives respond to the high pressure during asperity contact and form a protective film on the surface.

Mixed Lubrication

Mixed lubrication is the intermediate regime between full-film lubrication and boundary lubrication. Typical lubrication film thickness is in the order of magnitude 0.01 to 1 μm, about the height of the surface roughness. Mixed lubrication occurs when rotational speed of the rolling elements increases, creating a thin film of lubricant between the surfaces in relative motion. The contact between asperities is significantly reduced if compared to boundary lubrication, and so is the friction coefficient.

In this regime, although there is lubricant flow between the contacting surfaces, it is interrupted by asperity contact. The load is supported by both the lubricant and the asperities. The metal-to-metal contact of the asperities can lead to severe plastic deformation and wear that can lead to bearing failure. Therefore, although friction is low, elastohydrodynamic lubrication is preferred. However, the design of the bearing components should take into account these transition states.

Table 11 summarises the main features of the different lubrication regimes, and also highlights their main advantages and disadvantages.

Table 11. Properties of lubrication regimes (Holmberg and Matthews, 1994).

Lubrication regime	Film thickness h (μm)	Specific film thickness (λ)	Friction coefficient (μ)	Advantages	Disadvantages
Hydrodynamic	1-100	10-100	0.001-0.01	Low friction Low wear	
Elastohydro-dynamic	0.01-10	3-10	0.01-0.1	Low friction Low wear	
Mixed	0.01-1	1-4	0.02-0.15	Reduced friction	Wear and plastic deformation
Boundary	0.005-0.1	<1	0.03-0.2		High friction High wear

3.1.3.2. Lubrication solutions

3.1.3.2.1. Solutions available on the market for high-speed applications

The lubrication solution comprises the choice of the lubricant itself, but also of the bearing design features that affect its overall functionality. The bearing unit must be designed so as to allow the lubricant to be exploited at its full potential, particularly in terms of lifetime, since this is the key factor determining the maintenance interval of the unit. In addition to the functions of the lubricant itself, the lubrication solution must therefore also address the following key functions:

- prevention of the ingress of contaminant particles or liquids;
- prevention of the egress of lubricant.

The solution universally used is to seal the bearing unit with sealing caps on both sides.

The main requirement for seals for HS applications is to minimise the heat generated by the relative rotation of the sealing system components. The very high relative speeds needed for HS travel are, in fact, capable of leading to significant amount of heat even with very low friction. This adds to the heat generated by the other parts in relative motion and contributes to the degradation of lubricant lifetime. The requirement cannot generally be met by using seals with components in relative motion that are also in contact, therefore non-contact seals, such as the labyrinth seals shown in Table 12 are used. This type of seal is used almost universally among the main manufacturers. Although it is in principle less effective for the two key functions listed above due to the inevitable gap between components, the relatively good operating conditions of HS trains allows its use. In other applications it is not possible, in fact, to use non-contact solutions due to the operating conditions – e.g. trams where the tracks may be subjected to occasional flooding, or freight where visual inspection for lubricant leakage in the running gear is performed at longer intervals.

The rolling bearings in axlebox bearings only achieve the target service life if the grease is not allowed to escape from the bearing and the ingress of moisture and contaminants is prevented. The compact seal, also known as a cartridge seal, comprises a sheet steel component with a moulded sealing lip and a second sheet steel element which encloses the sealing lip to form a cartridge arrangement. The elastomer component comprises three sealing lips and an outer seal. The outer seal is located outside the cartridge and is intended to prevent the ingress of spray water and coarse contamination. The main sealing lip and the other sealing lips are located inside the cartridge. The main lip is a gap seal acting as a pressure compensator between the bearing interior and the cartridge and is primarily intended to retain the grease in the bearing. The two other lips are designed to prevent grease escaping and the ingress of moisture and contamination. As the sealing lips have only a minimal preload, the cartridge seal has a very low frictional torque (low friction seal). The inner surface of the cartridge forms the running surface for the seals.

Figure 9. TAROL unit with compact seal (Schaeffler Technologies, 2019).

Cartridge seals are primarily fitted to compact TAROL units, as shown in Figure 9. The cartridge sits on the extended inner ring rib. An additional support ring for the seal is not required. The cartridge seal is suitable for operating in open adapters.

WJ/WJP cylindrical roller bearings and spherical roller bearings are not sealed. In this case, the housing seal must be designed such that it prevents the ingress of contamination and moisture into the interior of the housing. Design measures must be put in place to retain the grease in the bearing.

Closed housings are usually sealed on the covered side with an O-ring. Suitable seals must be provided on the wheel side to prevent the ingress of water, moisture and contamination.

Contact or non-contact sealing elements can be used as bearing seals. Non-contact sheet steel metal caps are usually used in closed housings. These are simple sheet steel caps or labyrinths made from interlocking metal elements, Figure 10a, or systems with lamellar sealing rings, Figure 10b. These seals are not only effective and space-saving but also economical.

Figure 10. TAROL units with: (a) sheet metal cap seal, (b) lamellar sealing rings (Schaeffler Technologies, 2019).

Rotary shaft seals and compact seals are used as contact seals. Rotary shaft seals (Figure 11) are common when using open adapters where AAR specifications apply. These seals consist of a sheet steel element with a moulded elastomer sealing lip which runs on a seal support ring. Sealing lips are usually spring-preloaded and run under preload on the seal support ring. As the seals are unprotected in open adapters, these seals have a particularly robust design. Spring-preloaded seals exhibit high friction when running at higher speeds.

Figure 11. TAROL unit with rotary shaft seal (Schaeffler Technologies, 2019).

Table 12. Examples of labyrinth seal configurations (Schaeffler Technologies, 2019).

Seal	Properties
Single axial labyrinth seal	
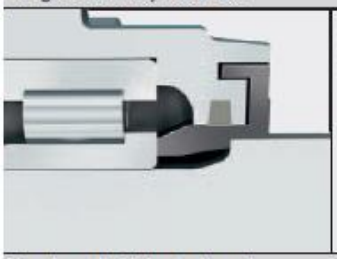	low space requirement non-contact improved sealing when combined with a felt seal, but then no longer a non-contact type
Single radial labyrinth seal	
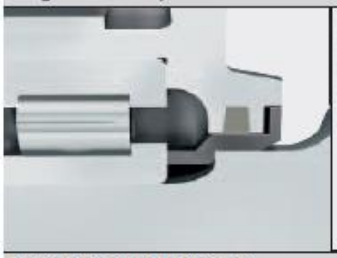	low space requirement also possible with split housings non-contact improved sealing when combined with a felt seal, but then no longer a non-contact type
Double axial labyrinth seal	
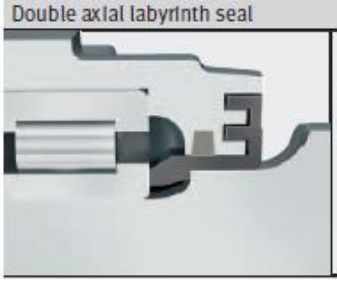	greater space requirement better labyrinth sealing action non-contact improved sealing when combined with a felt seal, but then no longer a non-contact type

Grease distribution in the bearing is important. Initially, the grease is distributed such that the bearing has as short a running-in time as possible. However, the grease must still be distributed during operation; higher bearing temperatures may occur during the distribution phase. The running-in time may last several hours. [Schaeffler TPI 256 (2019)].

For HS, the TAROL and cylindrical roller bearing units are greased and sealed at the factory. Experience has shown that taking the bearings apart after a certain period of service to inspect them and recondition them by cleaning and re-lubricating is not favourable for the overall maintenance cost. Particularly for HS, and particularly for TAROL units, this kind of intervention often causes a loss of performance leading to higher operating temperatures and short lubricant lifetime in the second phase of service.

3.1.3.2.2. Recent and emerging solutions

In this sub-section, solutions that are not available on the market are described. The sources of information are patents issued from 2010 found on Espacenet (European Patent Office, 2021) and Depatis (German Patent and Trademark Office, 2021). The most interesting are summarised in Table 13.

The main objectives are the prevention of incoming contamination and leakage whilst reducing the friction in the seal and allowing contaminations to be emitted. This is done by arranging the seal lips, stiffening the seal with metallic plates and reducing the friction

surfaces by using the centrifugal force.

Another possible innovation, proposed by GEARBODIES Partner Schaeffler, is in the improvement of oil lubrication to a point that it can be successfully and durably used for axlebox bearings.

Table 13. A selection of patents regarding sealing systems (patent number and company in brackets).

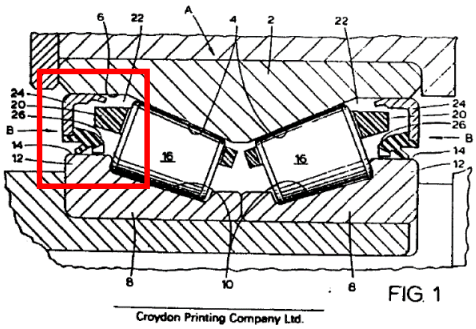

lifting a lip off to release some lubricant into established cavities. By doing so the pressure in the bearing is regulated without losing sealing effects (EP0228847, Timken)

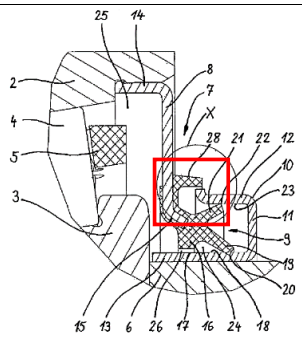

arrangement of the gap as an axial gap with constant height (DE102005016705, Schaeffler)

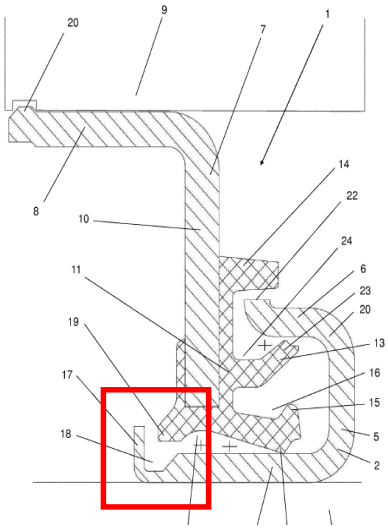

cassette seal with additional labyrinth structure and sealing lip (EP2949972, Schaeffler)

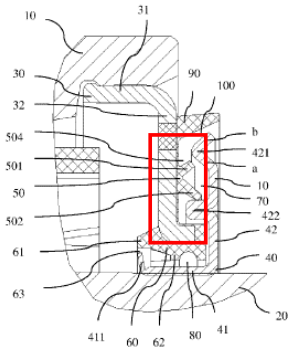

novel additional curve in the outer area and additional labyrinth (WO2017024861, Schaeffler)

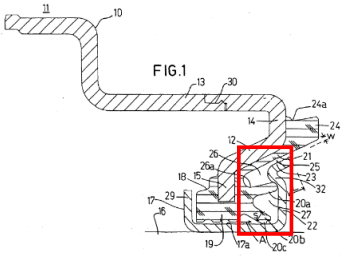

metal parts in the sealing reducing the friction surfaces to one while keeping a good sealing effect due to a high amount of small gaps (EP0754873, Schaeffler)

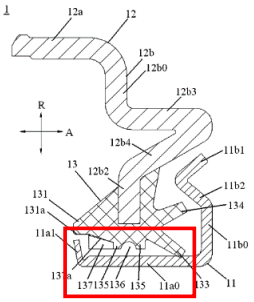

enhanced prevention of oil leaks by adding further sealing lips to the inner side and redesigning the sealing form (EP3477137, Schaeffler)

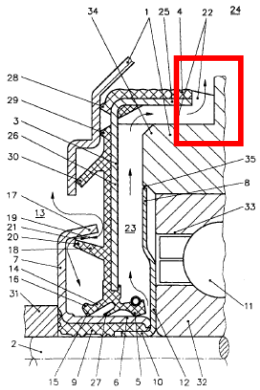

novel arrangement to drain water out of the seal (EP0922889, Freudenberg)

3.2. Use cases for journal bearings

3.2.1. General considerations

The use case for journal bearings is aligned with System Platform Demonstrator SPD1 "high speed" of SHIFT2RAIL. The definition of the SPD has been progressing in recent years. The latest deliverables describing it, namely IMPACT-1 D3.3 & D4.1, FINE-1 D3.1, are referenced in the list at the end of this document.

The use cases considered for GEARBODIES are based on the SPD1 use case, which comprises:

- a train concept, as a representative of several different trainset types in service,
- a track, as an example of high-speed double-track line, and
- representative operational conditions.

To this, the relevant GEARBODIES assumptions are added, including assumptions on what are to be considered as current and benchmark bearing maintenance plans.

3.2.2. Vehicle

The vehicle referred to by the IMPACT-1 project (Figure 12) was originally developed in the FINE-1 project: "*The FINE1 High-speed 300 train concept and associated reference parameters are used as the baseline situation for this SPD. The High-speed 300 train concept is constituted of a single-deck train with distributed or concentrated traction. There are several high-speed trains by different manufacturers that meet the requirements of this baseline train concept: AGV (Alstom), Zefiro (Bombardier), Oaris (CAF), AVRIL and Talgo 350 (Talgo), and Velaro (Siemens).*" (FINE-1, 2018).

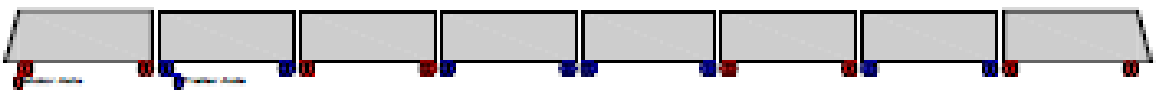

Figure 12. Vehicle topology for SPD1 (IMPACT-1 D4.1, 2018).

In GEARBODIES WS2.2 the focus will be on an unpowered bogie.

Of interest for GEARBODIES is the configuration with the journal bearings in-board of the wheels, such as fas is present on the Velaro Novo (Siemens) and FlexxEco (BT) train concepts. The configuration – in-board or out-board – of the axlebox bearings does not appear to be specified in the SPD1 descriptions. Therefore, the in-board configuration is taken to be compatible with SPD1.

Two use cases for the vehicle are thus set:

A. 2-axle unpowered bogie with out-board bearings

B. 2-axle unpowered bogie with in-board bearings

3.2.3. Track

The track for the SPD1 use case consists of an important high-speed double-track line in France, from Paris to Poitiers, with operation speeds of up to 300 km/h. Many characteristics are already defined, such as the static speed profile over the 300 km distance of the route, and the numbeor of Switches & Crossings (S&C), of structures (bridges and tunnels), and passenger stations along the route, as well as the vehicle acceleration/deceleration profile throughout the journey. Equivalent conicity, track geometry quality and cant deficiency are taken as compliant with standards EN 14363, EN 13848 and EN 13803 respectively.

No additional assumptions are envisaged for GEARBODIES.

3.2.4. Operations

The SPD1 use case description comprises useful quantities such as load factor (40%), frequency of services (3 / 6 trains/h), annual running distance (450,000 km), trains consisting of single and coupled units, and a fleet of 24 trainsets. An example timetable is also available.

At the moment there appears to be no need for additional GEARBODIES assumptions in this respect.

3.2.5. Baseline maintenance plan for axleboxes and bearings

Maintenance intervals up to 1.65 million kilometres for journal bearings are possible with favourable operating parameters and corresponding operational experience (Schaeffler Technologies, 2019).

The maintenance intervals are determined by the grease operating life. Due to the influencing factors from operation in the field, such as vibrations, temperature difference, frequency of starting and braking procedures, carriage downtimes, annual running times,

reconditioning and bogie cleaning practices, a well-founded, meaningful assessment of the grease operating life is, in practice, only possible through regular examination of the lubricant during operation. Suitable inspection intervals are established in agreement with the operators and provide a verifiable statement on the optimum maintenance interval for a specific vehicle. Table 14 shows the guide values for inspection intervals of rail vehicle journal bearings in different applications.

Table 14. Guide values for bearing unit inspection intervals (Schaeffler Technologies, 2019).

Design	Mounting location		Distance travelled km
Non-locating bearing arrangement	in trams with	almost standard bearings	250 000
		insert bearings	500 000
Inner and outer ring bearing arrangement	in local trains		600 000 up to 1 000 000
Axlebox bearings	in freight wagons		600 000
	in passenger carriages		1 000 000
	in high-speed applications		1 600 000

When axlebox bearings reach their first maintenance interval, they may not have reached their calculated rating life. The length of the maintenance interval is a result of the rating life or the service life of other components fitted in the bogie or the service life of the bearing grease, and it is decided to carry out all maintenance activities at the same time, based on the component with the shortest interval. The bearings can often be reused once they have been reconditioned. On TAROL roller bearing units, the seals are dismounted after delivery. To remove the grease, the inner rings and roller and cage assembly are washed with the outer ring and the intermediate ring in a special washing machine. The components are inspected for damage, fretting corrosion points are polished, and the units are reassembled. After quality control, the bearings are greased and the seals refitted or replaced. The units are marked as a reconditioned bearing and then repackaged and delivered. Reconditioned bearings can be used in the same way as new bearings.

In theory, this practice could extend the lifetime of the bearing unit to twice the maintenance interval, i.e. 3.3 million kilometres. However, for high-speed trains its adoption would require further research. Therefore, current lifetime is to be considered as 1.6 to 1.7 Mkm at best, as claimed by two important European manufacturers (Schaeffler, 2019; SKF 2020).

The call text behind the GEARBODIES project (S2R-OC-IP1-03-2020) indicates a benchmark value for the maintenance period of 2.5 Mkm which is therefore beyond current practices.

3.3. Deterioration phenomena and failure modes

Rail vehicle failure has serious implications. Aside from the obvious risk to life, failure has significant economic consequences as it usually results in loss of assets, disruption of services and possible penalties. The service delays can also affect the customer perception and damage the train operator's reputation. Early identification of bearing damage is important to reduce the risk of catastrophic failures. However, this is not a simple task given the complex operating conditions and different damage mechanisms that can take place during operation.

Failure is the deterioration that prevents the bearing from delivering the performance it was designed for. Bearing failure can occur for a number of reasons, such as manufacturing defects, poor maintenance, or incorrect handling. It can also be the result of unexpected operating conditions and environmental damage. According to the classification in standard ISO 15243:2017, failure modes occurring in bearings can be classified in six main categories:

1. Rolling contact fatigue
2. Wear
3. Corrosion
4. Electrical erosion
5. Plastic deformation
6. Cracking and Fracture

3.3.1. Rolling Contact Fatigue (RCF)

A common damage mechanism for axlebox bearings is rolling contact fatigue (RCF), which can result in subsurface or surface-initiated cracks. Subsurface cracks usually initiate at a depth which corresponds to the depth of the maximum shear stress (0.48*a* for a point contact and 0.78*b* for a line contact, where *a* is the radius of the contact area and *b* is the half-with of the rectangular contact area). Surface cracks may initiate at existing surface defects, peaks of the surface roughness or foreign particles entrained in the contact that can produce wear or denting of the bearing surface. Rolling contact fatigue cracks then advance from the resultant stress concentrators as the initiation sites. A tapered rolling bearing that failed due to RCF is shown in Figure 13. There are different types of RCF, which are briefly described below.

3.3.1.1. Subsurface initiated fatigue

Rolling contact fatigue (RCF) is the damage caused by the cyclical stress generated between the rolling element and the raceways. The material beneath the contact surface experiences compressive and shear stress, which constantly change direction.

Due to the cycling load, microstructural changes known as *martensite decay*, *Dark Etching*

Regions (DER) and *White Etching Areas* (WEA) may occur and microcracks can nucleate. The depth, *z* at which these phenomena are observed can generally be predicted based on the Hertzian theory and the type of contact (e.g., for roller bearings z=0.48a where a is the radius of the contact area). Subsurface cracks can also initiate at microstructural defects such as inclusions, a phenomenon often associated with the formation of the so-called *butterflies*. When these cracks propagate and reach the surface, small volumes of material will detach from the surfaces leading to *pitting*, *micropitting* or *spalling* which eventually will result in vibrations and ultimately in the collapse of the bearing.

3.3.1.2. Surface initiated fatigue

Surface initiated fatigue occurs when the asperities of the rolling contact surfaces are damaged, which is usually the result of incorrect lubrication. Under inadequate lubrication conditions, plastic deformation of asperities can occur and microcracks and microspalls can form. Even under appropriate lubricating conditions, surface-initiated fatigue can occur due to particles introduced in the contact area or as a result of extreme loads generating stresses higher than the yield strength of the material.

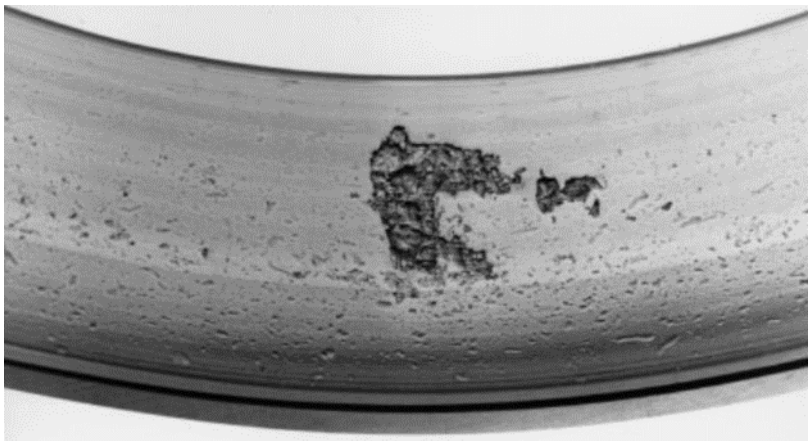

Figure 13. Fatigue damage in the outer ring raceway of a tapered roller bearing (Schaeffler Technologies, 2012).

3.3.1.3. Martensite decay

Significant alteration to the steel microstructure takes places as a consequence of the cyclical shear stress in the Hertzian zone. Dark etching regions (DER) form underneath the raceway surface in the regions of maximum stress, as depicted in Figure 14. They are an indication of martensite decay, the transformation of the initial tempered martensite into new phases in the Dark Etching Regions and White Etching Areas or Cracks (WEA/WEC). These cracks are disk-shaped regions of ferrite that usually appear at about 30° from the rolling direction. WEA are surrounded by carbide-rich layers which are very susceptible to cracking. Figure 15 illustrates this type of damage.

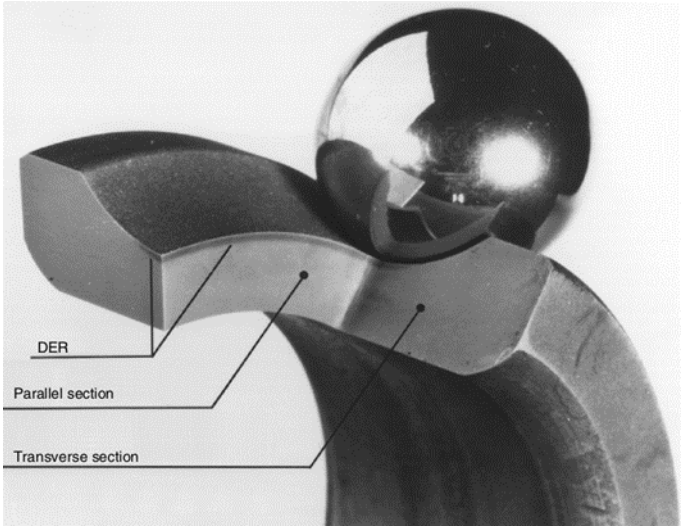

Figure 14. DER in raceway of a deep-groove ball bearing (Harris & Kotzalas, 2006).

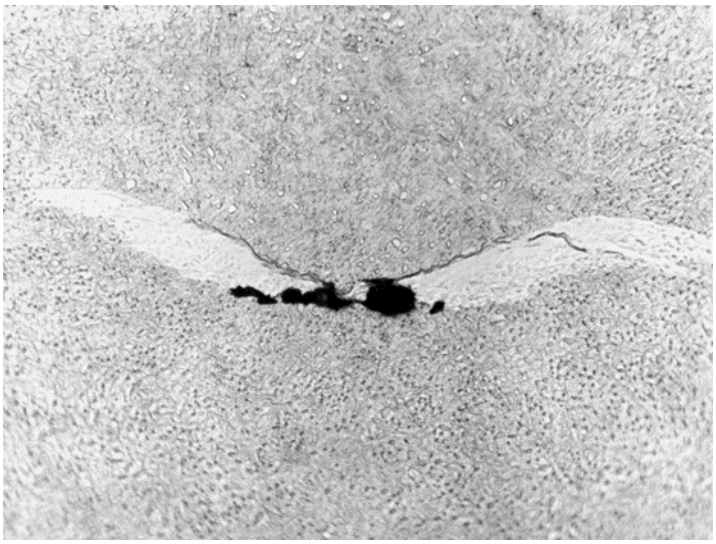

Figure 15. Fatigue crack in the subsurface of a ball bearing raceway (Harris & Kotzalas, 2006).

RCF consequences

Surface contact fatigue results in *pitting*, *micropitting*, *flaking* or *spalling,* which will lead to increased noise and vibrations during operation and the volumes of the material removed from the surface can become trapped in the contact, which can further contribute to damage by abrasive wear and deformation of the contact regions. If the operation of the bearing is continued, the temperature of the bearing will increase due to the increased friction of the degrading bearing, leading to other types of damage mechanisms becoming relevant and the bearing will eventually collapse and fail catastrophically. The catastrophic failure of a bearing can lead to the failure of the wheelset and/or the derailment of the rail vehicle, with the obvious associated safety, operational and financial consequences. Therefore, the bearings need to be replaced before they collapse. The potential

consequences of catastrophic failure of journal bearings are common to all failure modes.

RCF prevention and mitigation

Newer and state-of-the-art bearing steels have improved microstructure, i.e., martensite, bainite, the optimum amount of retained austenite and very low inclusion content. Correct mounting and fitting are also important to prevent the bearing being exposed to extra loads. Subsurface initiated fatigue can be prevented by ensuring the correct functioning of the lubricant and seals.

3.3.2. Wear

Wear in axleboxes is inevitable and some forms of wear will always be present. Even if the lubricant is functioning correctly, some wear damage occurs during the transition between standstill and motion and vice versa. This type of wear, which is referred to as polish, is tolerable as long as it is confined to the asperities; however, more severe damage can take place if sufficient lubricant thickness cannot be maintained or if contaminants enter the contact. Two different types of wear phenomena may affect the bearings, as briefly described below.

3.3.2.1. Abrasive wear

Wear is the continuous removal of material due to the rolling and/or sliding contact of the rolling elements' and the races' surfaces. It is usually caused by inappropriate lubrication or by ingress of solid contaminants. These particles can scratch the raceway surface when sliding on it, removing material which leads to more severe wear. However, as wear intensifies, the lubricant's effectiveness is reduced and abrasive particles can damage rings, rolling elements and cage. Severe wear can result in failure of the bearing.

3.3.2.2. Adhesive wear

Adhesive wear involves localised melting caused by lubrication failure which allows metal-to-metal contact. This results in the formation of small junctions which involves material transfer from one contacting surface to another. In inadequate lubricating conditions, the rolling elements accelerate rapidly and slide on the raceway surface, generating frictional heat. This heat leads to a localised temperature increase that can melt the two surfaces together, resulting in material transfer across the surfaces and higher friction. The elevated temperatures at the contacting points during this process can also lead to localized tempering and hardening, increasing the risk of cracking. Adhesion increases surface roughness, which leads to thinner lubricant films and higher friction, resulting in more damage. Therefore, this type of wear usually manifests suddenly. Figure 16 shows adhesive wear on the raceway of an outer ring.

Consequences of wear

Wear damage is usually manifested first as damage on the cage, since rolling elements and rings are significantly harder. Although bearings can continue to operate with mild wear, as

the damage continues, re-hardening of the worn surfaces takes place which can increase the risk of cracking. Furthermore, as wear progresses, friction increases which leads to higher temperatures and reduced lubricant effectiveness. Ultimately, the bearing is destroyed, and replacement is needed.

Prevention and mitigation of wear

Selection of bearing materials with higher hardness can help reducing abrasive wear but not adhesive wear. Correct lubrication and sealing must be ensured to prevent ingress of contaminants. Furthermore, operating load must remain within the design limits to ensure the lubricant can form a protective film.

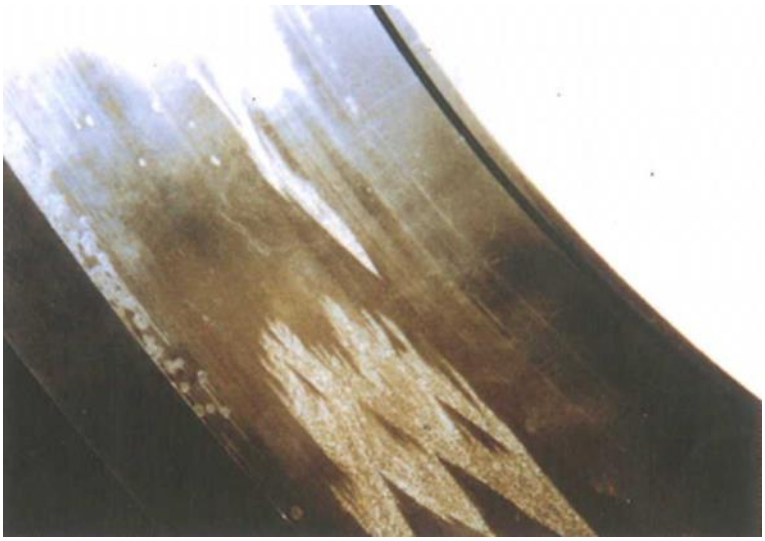

Figure 16. Adhesive wear damage in the outer ring raceway of a cylindrical roller bearing (Schaeffler Technologies, 2012).

3.3.3. Corrosion

Corrosion damage is the result of environmental effects that cause chemical reactions on the surface of the material. Steel oxidises in presence of water to form different ferrous oxides. In axleboxes, crevice corrosion can take place between the two contacting surfaces (e.g. between the rolling element and the raceways) where water can accumulate. While some forms of corrosion can be tolerable, some others such as fretting corrosion can result in catastrophic failure as they increase the risk of crack nucleation. There are different types of corrosion, which are briefly presented below.

3.3.3.1. Aqueous corrosion

Acqueous corrosion is the damage caused by the oxidation of metal surfaces due to the presence of water. When sealing is inadequate, water and other corrosive agents can enter the bearing. At a standstill, water can accumulate at the bottom of the bearing, near the contact area between the rolling element and the rings. When the water content surpasses

the ability of the lubricant to protect the steel surface, corrosion will occur, and rust will form. Aqueous corrosion can be identified by dark marks, rust, corrosion pits and spalling on the surface.

3.3.3.2. Frictional corrosion

3.3.3.2.1. Fretting corrosion

Fretting corrosion is the damage that occurs when there is a small relative oscillating movement between the bearing ring and its housing or shaft, usually caused by a loose fit. Asperities on the surface are rubbed off and oxidise, resulting in fretting rust (iron oxide). The iron oxide produced in the oxidation, can lead to an uneven support of the bearing rings, which might exacerbate the damage. Red or blackish rust marks on the inner and outer rings are indications of this type of damage. Figure 17 shows fretting corrosion of a cylindrical rolling bearing in which oscillations relative to the still shaft are the cause of the damage.

3.3.3.2.2. Fretting

It is the damage caused by oscillations characterised by very small amplitudes (several micrometres or tens of micrometres). Similar to surface contact fatigue, the repeated loading will eventually lead to initiation and propagation of cracks which result in small volumes of material to be removed from the surface.

Consequences of corrosion

Aqueous corrosion leads to premature failure.

Prevention and mitigation of corrosion

The best way to avoid corrosion is to keep the lubricant free from water and aggressive liquids by adequately sealing the application. Lubricants containing additives to inhibit corrosion is a possible solution. Fretting, with or without corrosion, on the other hand, can be avoided with correct fitting of the bearing, to eliminate oscillations. Equipment at a standstill for prolonged periods should be moved at regular intervals to avoid concentrated damage on the same area.

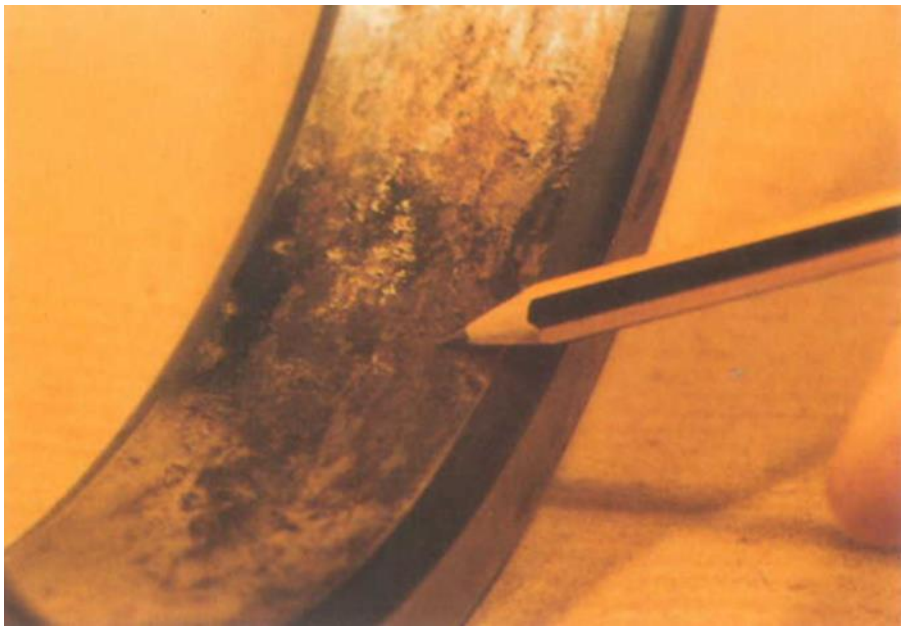

Figure 17. Fretting corrosion in the inner ring a cylindrical roller bearing (Schaeffler Technologies, 2012).

3.3.4. Electrical erosion

Although the risk of electrical erosion is important in bearings for electric motors and generators, it is less relevant for wheel-set bearings. Electrical erosion refers to the removal of material from bearing contact surfaces by unintended electric current or voltage. There are two main types of electrical erosion damage, namely, pitting and fluting which are the result of the two damage mechanisms discussed next.

3.3.4.1. Excessive current corrosion

This type of damage appears when an electrical current passes from one ring to the other via the rolling element. The high current density over the small contact area creates an arc-welding effect that heats up the material to temperatures that can reach melting values. The movement of the rolling element can detach molten material and result in electrical pitting, a series of small craters that appear duplicated in the rolling element and the raceway contacting surfaces.

3.3.4.2. Current leakage corrosion

When an electrical current is established, heat is created, and erosion occurs. In comparison with excessive current corrosion, the craters formed by this type of damage are shallow, smaller and more closely located. This damage might appear even at low current intensities. Dark marks in the form of flutes can develop on the raceways caused by the current passing through the rolling elements' and raceways' contact surfaces, as shown in Figure 18. Aside from increasing friction due to the formation of craters on the ring surfaces, this type of damage also induces change in the microstructure and deteriorates lubricant

performance.

Consequences of electrical erosion

All forms of electrical erosion are considered severe. Initial micro-craters progress into fluting due to the mechanical stress as the Hertzian contact area passes over the micro-craters. The subsequent mechanical resonance vibration occurs which causes the grey fluting marks. This can progress into severe adhesive wear, micropitting and macropitting due to the stress concentration points created by the craters that will eventually result in failure.

Prevention and mitigation of electrical erosion

Insulated bearings can be used to avoid this type of damage, although ideally the electrical system should be correctly installed.

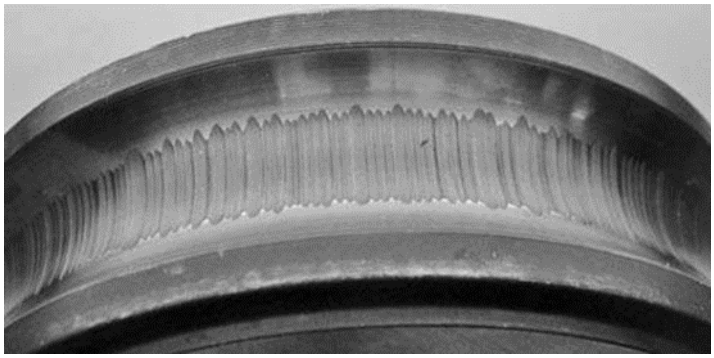

Figure 18. "Fluting" from electrical discharge in a variable speed motor (Sachs, 2019).

3.3.5. Plastic deformation

There are two different types of plastic deformation, which are due to two different causes, as briefly explained below.

3.3.5.1. Overload deformation

When the load supported by the bearing causes contact stresses that exceed the yield strength of the material, plastic deformation occurs. Commonly, the overloads occur when the bearing is stationary. Stationary and shock overloading result in plastic deformation of the rolling-element and raceway contact surfaces, which usually appears in form of depressions or flutes (true brinelling). Usual causes of overloading are the incorrect handling of the bearing during mounting or inadequate operating conditions.

Overloading damage in wheelset bearings commonly takes place during mounting, due to incorrect procedures. Figure 19 shows a tapered roller bearing mounted on a wheelset in which the cage has been flattened during mounting, resulting in permanent deformation.

Figure 19. Plastic deformation of the roller cage during installation on the wheelset (SKF, 2017).

3.3.5.2. Indentations from particles

Solid contaminants might act as indenters when pushed down the raceway surfaces by the rolling elements. Depending on the nature of the indenter, the damage can be in the form of plastic deformation, fatigue and spalling. The indentation marks caused by this type of damage are usually found distributed around the surfaces of both rings and the rolling elements.

Consequences of plastic deformation

Overload damage usually takes place rapidly, once the materials' load bearing capacity has been exceeded. Plastic deformation on the raceways due to inadequate handling can cause noise and vibration during bearing operation. Indentations can cause spalling in which particles and contaminants can become trapped. Once plastic deformation has taken place, further damage can occur usually in the form of cracking and fracture of the rolling elements or rings. Fragments and debris finally destroy the entire bearing, at which point the primary damage can no longer be identified. Any bearing with appreciable plastic deformation should be considered defective.

Prevention and mitigation of plastic deformation

Increased strength and hardness of the bearing steels have improved the resistance to plastic deformation. Lubricant cleanliness and correct sealing are important factors in the prevention of indentations. This type of damage commonly takes place during mounting and storage; therefore, it can be reduced by correct mounting procedures and adequate storage. Finally, maintaining operating conditions within design values can prevent overloading.

3.3.6. Cracking and fracture

Different types of cracking and/or fractures may occur in bearings, due to different causes and degradation modes, as briefly explained below.

3.3.6.1. Force fracture

When the tensile strength of the material is locally exceeded, due to stress concentration around defects, cracks form and propagate. Incorrect mounting procedures are common causes of force fracture in bearings. Over-stressing the bearing with high impact loads, e.g. when hitting it with a hammer and chisel, or with high residual hoop stresses generated when heating it to fit an oversized shaft, can lead to the formation small cracks. Once the bearing is put into operation, these cracks can grow to the full cross section of the component, resulting in fracture.

3.3.6.2. Fatigue fracture

Fatigue cracking can appear when the fatigue strength of the bearing is exceeded due to bending, tension or torsion conditions. Existing defects serve as stress concentrators and facilitate crack formation. Crack growth occurs in steps with the cyclic load, ultimately resulting in fracture of the rings or cages.

3.3.6.3. Thermal cracking

Residual stresses caused by heat treatments are a common cause of thermal cracking. Thermal cracking can be recognised by the cracks oriented perpendicular to the direction of the movement.

Consequences of cracking and/or fracture

Fracture renders the bearing defective.

Prevention and mitigation of cracking and/or fracture

Adequate mounting procedures can prevent cracking during mounting. Correct fitting between the shaft, bearing and housing can also reduce fatigue damage and cracking. Correct lubrication is important to reduce both fatigue and thermal cracking. A loose fit frequently leads to cracking (see Figure 20) of the outer ring because the piece is not well supported as the contact forces are applied and bending stresses are added to the other operating stresses.

Figure 20. Cracking of a through-hardening bearing (Sachs, 2019).

3.4. Assessment and recommendations for further work

The list of key Technology Concepts identified in the previous sub-section and considered promising for further developments is presented in Table 15. In this sub-section a preliminary assessment is performed to produce a short-list of the concepts to be retained as potential contributors to the GEARBODIES Design Concepts, which can be developed further.

Some concepts/technologies have been screened out before undergoing further assessment. These, and the reasons for not considering them for further development in GEARBODIES, are given in the following points.

- The main disadvantages of the deposition methods (PVD, CVD, ion implantation, etc.) for coatings are the limited size of the component that can be coated (due to smaller size of the reactors), the lack of uniformity of the coating for complex geometries and the high cost of the coated product; this makes these methods currently unsuitable for rail vehicle journal bearings.
- Powder metallurgy may be interesting in the future due to its capability of obtaining complex geometries, albeit for not heavily loaded components. In this sense, seals and cages are bearing components that might rely on this technology. However, these manufacturing techniques are not currently considered suitable for rail vehicle journal bearings due to the high loads in this application.

Table 15. Technology Concepts that are promising for further developments, related to the two bogie design concepts: conventional with out-board bearings, non-conventional with in-board bearings.

Bearing item	*Technology concept*
DESIGN	
Roller design	balls
	SOA tapered rollers
	SOA cylindrical rollers
	low "back-friction" tapered rollers
	crowned tapered rollers
Layout	tapered roller layout
	cylindrical roller layout
	Twin-tandem® ball layout
Lubricant / lubrication concept	SOA grease
	SOA oil
	solid lubricant
Sealing system	Advanced non-contact labyrinth seals
MATERIALS	
Roller material	SOA steel grades
	HEA
	ceramics
	HEAF coated rollers
Ring material	SOA steel grades
	HEA
	ceramics
	HEAF coated rings
Cage material	Phenolic resin
	Polyamides
	PEEK
	PTFE
ADDITIONAL SYSTEMS/ITEMS	
Additional systems/items	lubricant condition monitoring lubricant cooling
	ferromagnetic particle removal

In the following sub-sections, the potential benefits of the Technology Concepts (TCs) of Table 15 with regard to the objectives of GEARBODIES are assessed against key criteria to determine whether they will be shortlisted for further consideration as potential developments to be investigated with GEARBODIES. The criteria are:

- lubricant lifetime;
- roller/ring lifetime;

— cage component lifetime;
— other operator impacts.

A fifth non-technical criterion is the feasibility of development within GEARBODIES.

Lubricant lifetime is the highest priority criterion, since it is the one that generally dictates the lifetime or maintenance interval of the bearing in current designs of journal bearings.

3.4.1. Lubricant lifetime

Primarily, the TCs that reduce friction also lower as a consequence the mean operating temperature, thus extending lubricant lifetime.

Some solutions achieve this through an improved geometry of the contacting rollers and raceways. Ball rollers, up till now rarely used, except in association with specifically studied layouts utilised in early high-speed trains, offer lower values for overall surface in contact and shear stress on the lubricant. It is challenging to meet railway load requirements with this choice, but in association with the in-board configuration of the bearings it looks quite promising. This solution is shortlisted for the "focussed" TRL5 concept.

Remaining with less radical choices, slight geometry improvements to tapered rollers or cylindrical rollers might be capable of leading to significant improvements in bearing friction when associated with novel materials. However, in GEARBODIES there is no scope for research on this topic, so the focus in the project will be on the materials only. The novel materials assessed all seem capable of outstanding tribological properties, and moreover the wear debris they generate is different from that of conventional steel and may have an effect on the lubricant lifetime.

The use of oil lubrication may also have a positive effect on lifetime. It also provides the possibility for relatively easy replacement, without disassembling the bearing, in case of degradation, and this is very interesting for prolonging the interval of the first bearing replacement in the maintenance plan. This solution is shortlisted for further consideration in the project, particularly for the compatibility of oil and polymers which, if verified in the GEARBODIES tests, could lead to whole bearing design concepts with potentially longer lifetimes and vouch for further research work on the topic in other projects.

Of the more far-fetched ideas, lubricant cooling and ferromagnetic particle removal (if steel remains the material of choice) might have some role in prolonging lubricant lifetime, and lubricant condition monitoring may assist in maintenance on condition. However they are out of the scope of work of GEARBODIES.

3.4.2. Roller/ring lifetime

The TCs with the greatest apparent potential with regard to this criterion are the materials of the rollers and rings themselves.

Emerging solutions discussed in sub-section §3.1.2.1.2 have their own specific merits with

regard to their consideration as potential future materials for rollers and races. These solutions have the potential to outperform modern steel grades that are currently used in bearing applications, e.g., the high entropy alloys (HEAs) offer a very attractive set of properties as materials for rollers and races.

Steel has been the conventional material for rolling element bearings for a long time and the high cleanliness of modern steels ensures that failures caused by detrimental inclusions are very rare. Steel quality combined with suitable thermochemical treatments such as carburising, nitriding and carbonitriding significantly improves the lifetime of the bearings.

However, the *metastable phases* present in the hardened case, such as tempered martensite, can suffer transformations caused by the stress-assisted diffusion of carbon atoms. Due to their *sluggish diffusion effect*, high entropy alloys exhibit an increased phase stability.

Hard ceramic coatings such as TiN, TiC, TiCN, CrN, AlN, DLC and many others offer an excellent alternative to thermochemical treatments for bearing steels and very good results have been reported. The development of coatings has been mainly driven by the aim to achieve *high hardness*, associated with *high elastic modulus*, as a requirement for resistance to wear. In recent years, however, the focus has been shifted towards coatings with high hardness and low elastic modulus (high H/E ratio) and hence improved toughness, which are recommended for improving the wear resistance of substrate materials such as steels with similarly low elastic modulus. Metallic glasses are materials with high H/E ratio and they have excellent wear resistance. It is envisaged that this combination of properties can also be achieved in high entropy alloys which are also a class of multi-principal element alloys (MPEA).

Considering the possibility to develop high entropy alloys with high H/E ratio combined with high phase stability, HEA are very promising candidate materials for bearing rollers and races. Therefore, this TC has been shortlisted as the roller/ring materials-related conceptof choice for GEARBODIES developments.

3.4.3. Polymer component lifetime

The key to meeting this criterion is through innovations in the polymers themselves. Up till now, the polymers have been developed to attain the correct structural and tribological properties under the required mean and maximum operating temperatures. There is scope for maintaining these achievements for the future, for example, while working on the ageing behaviour through suitable additives.

In GEARBODIES, the developments tests will investigate the compatibility between state-of-the-art polymers and lubricants, to identify the combinations with the best ageing behaviour. This will lead to recommendations for use of the products in ultra-long lifetime bearings and specifications for future research on improving ageing behaviour. In principle, all of the polymers indicated in Table 15 are of interest. Based on the expertise available in GEARBODIES, however, only polyamides and PEEK have been shortlisted for the

GEARBODIES Design Concepts. Both the feasibility of accurate studies within GEARBODIES and their wide use for journal bearings has supported this decision. The other materials are not to be ruled out completely for future research, however.

3.4.4. Other operator impacts

The in-board-bearing wheelset configuration has potential significant impacts on the operator aside from those on bearing maintenance. In fact, with this configuration there is scope for wheelset mass reduction and aerodynamic improvements. The impact on assembly and maintenance activities needs to be further assessed (axlebox not visible from the trackside, disassembly/removal of the bearing requiring removal of at least one wheel from the wheelset). However, in combination with the longer lifetime of the bearing, this aspect tends to lose importance.

The other TCs are not expected to have significant operator impacts, neither positive nor negative. It is also a requirement for the design concepts to be developed in GEARBODIES not to have significant negative impacts (see §4).

3.4.5. Short listed Technology Concepts

Table 16 shows the Technology Concepts shortlisted for further consideration in the GEARBODIES development. Combinations of some or all of these TCs will be developed into Design Concepts to be further analysed in GEARBODIES WP4 after having defined the requirements and specifications.

Table 16. Technology Concepts shortlisted for the GEARBODIES Design Concepts, related to the two bogie design concepts: conventional with out-board bearings, non-conventional with in-board bearings.

Bearing item	*Technology concept*
DESIGN	
Roller design	balls
	SOA tapered rollers
	SOA cylindrical rollers
Layout	tapered roller layout
	cylindrical roller layout
	Twin-tandem® ball layout
Lubricant / lubrication concept	SOA grease
	SOA oil
Sealing system	advanced non-contact labyrinth seals
MATERIALS	
Roller material	advanced steel grades
	HEA
	HEAF coated rollers
Ring material	advanced steel grades
	HEA
	HEAF coated rings
Cage material	polyamides
	PEEK

4. Requirements for running gear journal bearings

This section sets out high-level user requirements based on the knowledge of the GEARBODIES consortium. Apart from the SPD1 use case indicated in §3.2, the high-level requirements presented here do not refer to any specific vehicle or company. They are generic high-level requirements that have emerged from internal project discussions.

The use of four requirement categories is consistent with the companion GEARBODIES reports D1.1 and D1.2. Each requirement category is discussed in one of the following sub-sections.

The main goals behind the requirements are:

- consistency with the SPD1 use case defined in previous SHIFT2RAIL work;
- to consider the needs of the EU rail sector for journal bearing units with extended lifetime and simple maintenance requirements that are cost effective:
  - to reduce the maintenance cost associated with journal bearings by up to 20%, supporting the IP1 objective of reducing railway system LCC;
  - to improve the reliability of train operation supporting the IP1 objective 'operational reliability increase';
- to consider the ambition for reducing the mass of the bearings, with the aim of achieving the positive consequences of mass reduction (particularly un-sprung mass) related to track degradation and energy needs (supporting the IP1 objective of 'mass reduction and energy efficiency');
- to consider the high importance of energy efficiency for high-speed applications, in which both the frictional resistances in the bearings and, more importantly, the trains' aerodynamic resistance, plays a role.

These goals are consistent with the wider objective of achieving a bearing unit lifetime which matches the anticipated service life of the vehicle, i.e. at least 25 years, as the focus of this work is on the bearings for high-speed trains.

The requirements listed in the following sub-sections are each in line with one or more of the above goals. The requirements generally address the bearing Design Concept (DC), considered to combine several of the technology concepts (TC) described in the previous section §3. The specifications of section §5 have been developed in response to these requirements.

4.1. Functional and operational requirements (FOR)

4.1.1. Compatibility with vehicle design

FOR1. The DC **shall** be developed for an unpowered bogie of a vehicle which is part of a trainset compatible with the SPD1 use case description.

FOR2. The DC **shall** be suitable for a maximum vehicle speed of 330 km/h.

FOR3. The DC **shall** be suitable for a wheel diameter ranging between 750 mm (completely worn unpowered bogie wheel) and 1040 mm (new motor bogie wheel).

FOR4. The DC **shall** be capable of operating at a maximum rotational speed of 2800 rpm.

FOR5. The dimensions of the DC (internal diameter) **shall** be suitable for a cylindrical wheelset journal of a diameter compatible with the load requirements.

FOR6. The DC dimensions and its position in the vehicle **shall** lead to compliance with TSI requirements regarding the loading gauge.

FOR7. The DC **shall** accommodate angular misalignments between axle and axle box due e.g. to suspension travel compatible with today's designs.

4.1.2. Loads

FOR8. The DC **shall** be designed for the journal bearing load associated with a static axle load of at least 12.5 t.

FOR9. The DC **shall** withstand the dynamic loads corresponding to track geometry quality compliant with standard EN 13848 and track layout as defined for the SPD1 use case.

FOR10. The DC **shall** withstand the impact loads associated with traversing 0.683 S&C/km at up to 300 km/h throughout its service life (derived from 205 S&C over the 300 km use-case route (0.683 S&C/km)).

4.1.3. Energy

FOR11. The DC **should** minimise energy consumption due to internal frictional resistances and aerodynamic drag, within the limits dictated by the mandatory requirements.

FOR12. The DC **shall** not cause higher energy consumptions than conventional designs.

FOR13. The DC **shall** not rely on an external energy supply in order to function.

4.1.4. Operating environment

FOR14. The DC **shall** be capable of operating in the operating environment of

conventional high-speed designs.

FOR15. The DC **shall** be capable of operating in the natural environment of the use case, and **should** be capable of operating in the natural environment throughout the EU, with full nominal performance in relation to the following environmental conditions:

a. temperature (-35°C to +55°C);
b. humidity;
c. precipitation;
d. exposure to sun;
e. air pressure;
f. altitude.

4.1.5. Workshop operations and handling

FOR16. The DC **shall** have the same carriage, handling and storage requirements as conventional designs.

FOR17. The DC **shall** allow visual inspection either from the trackside or an inspection pit.

FOR18. All DC components subjected to fatigue **shall** allow full ultrasound testing.

FOR19. The DC **should** allow fitting to the wheelset with conventional practices.

FOR20. The management of consumables (e.g. lubricant) associated with the DC **should** not require different practices from those currently required.

4.2. RAMS and LCC requirements (RLR)

RLR1. The DC **should** ensure the achievement of the reliability and availability KPI performance targets.

RLR2. The DC **should** maintain or improve the performance in terms of maintainability of conventional designs.

RLR3. The DC **shall** ensure a safe operating life determined either by: a) an acceptably low failure rate within specified operating life, with replacement at end of specified operating life; b) condition-based life, nominal operating life with inspection and monitoring to detect early failure to reduce risk of in service failure to acceptable levels.

RLR4. The DC **shall** not incorporate hazardous nor toxic materials.

RLR5. The Life-Cycle-Cost associated with the DC **shall** be lower than that of the current generation of journal bearings for similar high-speed applications.

RLR6. The DC **shall** not have significant negative impacts on the operator.

RLR7. The interval between major maintenance operations required by the DC **should** be greater than 1.65-2.0 million km. In this context "major" maintenance operations means those requiring disassembly or removal of the journal bearing from the vehicle/wheelset, and excludes inspection and change of lubrication where this does not require disassembly or removal of the journal bearing from the vehicle/wheelset.

4.3. Requirements regarding compliance with standards and regulation (SRR)

4.3.1. High level regulations

The highest-level EU regulation addressing bearings directly, and applicable to high-speed applications, is the **Loc&Pas TSI.**

The related clauses are the following. The issues that may directly or indirectly be of interest for GEARBODIES are summarised.

§4.2.3.3.2 Axle bearing condition monitoring

The objective of the condition monitoring is to detect deficient axle box bearings. For units of maximum design speed higher than or equal to 250 km/h, on board detection equipment is mandatory.

This equipment must be able to detect a deterioration of any of the axle box bearings of the unit. The bearing condition is evaluated either by monitoring its temperature, or its dynamic frequencies or some other suitable bearing condition characteristic.

§4.2.3.5.2 Wheelsets

Wheelsets are defined to include accessories parts, among which the axle bearings.

The wheelset, and thus the bearings, are to be designed and manufactured with a consistent methodology using a set of load cases consistent with load conditions defined in clause §4.2.2.10 of the TSI and in **EN 15663:2009/AC:2010.**

The mechanical behaviour of the axle boxes is regulated; the axle box must be designed with consideration of mechanical resistance and fatigue characteristics. The conformity assessment procedure is described in clause §6.2.3.7 of this TSI (see below).

Temperature limits must be defined by testing and recorded in the technical documentation.

§6.2.3.7 Mechanical and geometric characteristics of wheelsets (clause 4.2.3.5.2.1)

The demonstration of compliance for mechanical resistance and fatigue characteristics of the rolling bearing must be in accordance with **EN 12082:2007+A1:2010**.

4.3.2. General standards for rolling bearings

Of the non-railway-specific standards, the most relevant for GEARBODIES is ISO 281, containing methods for determining the nominal rating life (Schaeffler Technologies, 2019). This is the rating life that is reached or exceed by at least 90% of a sufficiently large number of apparently identical bearings before the first evidence of material fatigue develops. The equation used to calculate the fatigue limit life assumes a constant load of constant magnitude which is purely radial for radial bearings. This is not usually the case in axlebox bearings. The forces change direction and magnitude. In these instances, a constant force must be determined for the rating life calculation which is equivalent to the loading. This force is described as the equivalent dynamic load.

4.3.3. Railway-specific rolling-bearing standards

There are three railway-specific standards in Europe (Kilian, 2010).

EN12080, Railway Applications – Axle Boxes / Rolling Bearings, contains several mandatory requirements when bearings are ordered and produced according to this standard. However, it also allows for design freedom and project-specific agreements between customer and supplier. Extensive non-destructive testing is required on all journal bearings. This includes full ultrasonic testing of the rings so that any subsurface defect in the material can be detected, and a crack inspection to detect surface fissure. Rollers are 100% eddy-current-tested and there are hardness tests random samples of rollers and rings. For all assembled bearings the axial clearance (bench lateral) is measured and all inspection results are documented.

EN12081, Railway applications - Axleboxes - Lubricating greases, covers items such as consistency, traceability, packaging and, most of all the approval process for greases.

EN 12082, Railway applications - Axleboxes - Performance testing, requires that any new axle box design undergo extensive performance testing with demanding test conditions. The EN12082 rig performance test applies a relatively high lateral load (in the axial direction) to the journal bearings. The radial force is constant, whereas the axial force is alternating in two directions. The test cycles consist of acceleration from zero speed to test speed, running with test speed for some time and then decelerating to a stop; the next cycle then starts in the opposite direction (the direction of rotation is changed). There is a reference vertical load based on the vehicle mass and number of wheelsets. From this the radial and axial force are defined. Since the axial load is only applied at speeds above 20% of the nominal test speed, and it is zero for a couple of seconds when the direction is changed from one side to the other, this performance test a very daunting one. The mileage of performance testing depends on the degree of change from existing, already-tested designs. For a completely new bearing design it is 800,000 km for vehicle speeds above 200 km/h. A 100,000 km test is allowed when the modification from previously tested designs is not substantial.

4.3.4. Other relevant railway standards

There are also other standards addressing railway running gear that are relevant for bearings:

EN13103 Railway Applications – Wheel Sets and Bogies / Non-Powered Axles / Design Method

EN 13104 Railway Applications – Wheel Sets and Bogies / Powered Axles / Design Method

EN 15827 Railway applications - Requirements for bogies and running gears

EN 13103 and 13104 specify elements of axle design relevant for bearings, for example the geometric characteristics of axle journals, particularly to avoid axle damage due to inadequate bearing design (e.g. indentations). EN 13104 is no longer active. EN 15827 consolidates all the separate requirements specified in rolling stock TSIs and European Standards relating to bogies and running gear together into an overall requirement and process that ensures a functional and safe design is achieved for a defined operating envelope.

Many other standards are applicable for specific aspects related to bearings. They are not all listed here. An example is EN 50125-1:2014 (Railway applications - Environmental conditions for equipment - Rolling stock and on-board equipment), that is used in the specifications listed in §5. Such standards will be used appropriately during the project.

4.3.5. Compatibility requirements

SRR1. All aspects of the DC **shall** ensure the conformity of the rolling stock subsystem with the Loc&Pas TSI.

SRR2. All aspects of the DC **should** ensure conformity with the mandatory and widely used non-mandatory applicable standards.

In the event of non-conformity with the applicable standards, proposals for integrations will be issued.

4.4. Performance requirements (KPIs)

4.4.1. Lifetime

KPI1. The DC **should** have maintenance interval and lifetime values corresponding to either the Extra-Long lifetime or Ultra-Long lifetime as shown in Table 17, depending on the target TRL for the DC, with an additional target of an Ultra-Long lifetime of the bearing (rollers and rings) of 25 years, with one or more maintenance operations through that lifetime.

Table 17. Maintenance interval targets for the Extra-Long and Ultra-Long lifetime concepts as compared with the current and benchmark lifetimes.

Component maintenance interval	Current (C)		Extra-Long-lifetime XL			Ultra-Long-lifetime UL		
	Mkm	yrs	Mkm	yrs	Δ% C	Mkm	yrs	Δ% C
Lubricant	1.65	3.7	3.0	6.7	+82%	5.625	12.5	+241%
Cage	1.65	3.7	3.0	6.7	+82%	5.625	12.5	+241%
Seals	1.65	3.7	3.0	6.7	+82%	5.625	12.5	+241%

annual running distance of 0,45 Mkm (SPD1 high-speed)

4.4.2. Reliability and availability

KPI2. The DC **should** have a 5% lower bearing unit failure rate than conventional designs.

KPI3. The DC **should** allow a 0.5% increase in availability of the trainset with respect to conventional designs.

4.4.3. Weight

KPI4. The DC **should** have a weight of at least 5% less than conventional designs.

KPI5. The DC **should** reducte traction energy by 1% (based on the traction energy for the whole trainset, and all of the unpowered wheelsets being fitted with the DC).

4.4.4. Life-Cycle Costs

KPI6. The Life-Cycle-Cost of the DC **should** be 15% less than conventional designs.

5. High-level specifications for running gear journal bearings

The specifications listed in this chapter target the enhancement of bearing lifetime and reduction of its LCC, and consider relevant details, including materials and geometries, for key bearing components.

The specifications respond to the requirements of §4.

They are divided into two subsets:

- one (§5.1) for the "focussed" concept (TRL5), for which the background work available allows a formulation that will lead to the construction of a prototype to be tested in the validation phase (phase 3) of the GEARBODIES project;
- one (§5.2) for the "open" concepts (TRL3-4), which will assess. investigate, select and combine a number of the shortlisted Technology Concepts described in §3 In GEARBODIES these will be firstly narrowed down (phase 2) and then described with more detailed specifications (phase 3) depending on the results of the development tests.

5.1. General technical specifications for the focussed concept

5.1.1. Geometry

Geometry specifications **shall** be as in Table 18.

Table 18. Journal bearings, general technical specifications, geometry.

Design space:	Shaft Diameter: 178,62 mm Outer Diameter: 265,137 mm Width: 173 mm

5.1.2. Kinematics

Kinematics specifications **shall** be as in Table 19.

Table 19. Journal bearings, general technical specifications, kinematics.

Direction of rotation:	Both directions
Maximum speed:	2800 1/min
Guidance type:	Rolling element guidance

5.1.3. Loads

Load specifications **shall** be as in Table 20.

Table 20. Journal bearings, general technical specifications, loads.

Load direction:	Main forces in radial direction + axial forces
Force size permanent:	85 kN Radial and 4 – 26 kN Axial
Force size	Double load (permanent*2)
Shocks:	Impact is calculated against plastic deformation
Force frequency: (Permanent)	Load distribution (55%; 16%; 16%; 6%; 6%; 0,5%; 0,5%)
Loads for calculation	

Load case	Fx N	Fy N	Fz N	Mx N m	My N m	Mz N m	Share %
1	0	82355	0	0	0	0	5.5
2	12896	82355	0	0	0	0	1.6
3	-12896	82355	0	0	0	0	1.6
4	3801	82355	0	0	0	0	0.6
5	-3801	82355	0	0	0	0	0.6
6	25791	82355	0	0	0	0	0.05
7	-25791	82355	0	0	0	0	0.05

Life time	The service life is to be calculated according to Lhmr and must reach a service life of 3 Mkm
Contact pressure	The contact pressure must be in the range of the fatigue strength: < 2,000 MPa for most materials, may be higher for higher quality materials.

5.1.4. Material

Material specifications **shall** be as in Table 21 (steel according to EN ISO 683-17:2014, bearing according to EN 12080:2017).

Table 21. Journal bearings, general technical specifications, material.

Rings:	100CrMnSi6-4
Cage:	See point 5.3
Rolling elements:	100Cr6

5.1.5. Lubricant

See §5.2.3.

5.1.6. Sealing

Sealing **shall** be based on the cartridge type seal.

5.1.7. Environmental requirements

Environmental specifications **shall** be as in Table 22.

Table 22. Journal bearings, general technical specifications, environment.

Temperature requirements:	Bearing temperature must be below 70°C
	Environmental temperature -35°C / + 55°C
Relative air humidity	EN 50125-1:2014 up to 100%

5.1.8. Mounting

Mounting specifications **shall** be as in Table 23.

Table 23. Journal bearings, general technical specifications, mounting.

Mounting:	Outer ring must be one-piece
	Inner ring should be two-pieces

5.1.9. Application

Application specifications **should** be as in Table 24.

Table 24. Journal bearings, general technical specifications, application.

Operating condition:	Inboard journal bearings
Wheel diameter	753 mm
Performance test:	800.000 km
According to EN 12082	
Release test:	100.000 km for development project
Noise:	Inspection necessary after assembly regarding ball damage/completeness. Definition must take place with experts.

5.1.10. Maintenance

Maintenance interval of the bearings **should** be at least 3 Mkm (service/replace).

5.2. General technical specifications for the open concepts

5.2.1. Specifications for steel grades and/or alloys

The development of novel materials for rollers and races should take into consideration the specifications of state-of-the-art steel grades that are currently used in such applications (as summarised in §5.1.4). The characteristics of benchmark steel grades (including mechanical properties, thermal properties, chemical properties, etc.) provide useful guidance on both the boundaries for novel material properties and targets to be achieved.

Hardness together with the elastic modulus are key properties, as they are correlated to the wear resistance. Development of steel grades for applications such as bearing rollers and races mostly focussed on achieving high hardness associated with high elastic modulus, a combination that is capable of providing good wear resistance. Recent developments also include coatings with combined high hardness and low elastic modulus (high H/E ratio) that could provide improved toughness, improving thus the wear resistance of substrate materials such as steels with similarly low elastic modulus. Generally, high hardness over elastic modulus ratios leads to higher wear resistance. Hardness is also proportional to yield strength, thus, materials with high hardness and low elastic modulus are preferred for high wear resistance.

However, it was observed that *metastable phases,* which are present in the hardened steel (e.g., tempered martensite), can suffer transformations caused by the stress-assisted diffusion of carbon atoms, which contribute towards wear and other degradation phenomena. Diffusivity of Carbon in the martensite phase provides an indication of phase stability. Diffusivity is characterised by the diffusion coefficient and higher values would lead to higher susceptibility to martensite decay. The value of stress-assisted diffusion of Carbon in martensite has been reported as 2.32×10^{-9} m^2/s.

Therefore, it is considered that alloys with sluggish diffusion effect (i.e., *diffusion coefficients* lower than in pure metals and conventional alloys) will have an increased phase stability and may exhibit better performance for applications such as bearing rollers and races. Diffusion coefficients in high entropy alloys are considerably lower than this value, which suggests that these materials can exhibit high phase stability and higher resistance to rolling contact fatigue.

Considering both the performance of actual benchmark steel grades and the goal to achieve increased stability phase through lower diffusion coefficients, further development of materials for rollers and races should aim to achieve:

- Carbon diffusion coefficient lower than 2.32×10^{-9} m^2/s;
- Hardness higher than 6 GPa;

— Elastic modulus lower than 200 GPa.

Other properties such as toughness, friction, thermal expansion, thermal stability and corrosion resistance should also be taken into account, so that to make sure that they do not prevent the applicability of novel material solutions. These properties, while secondary in the design of new materials for rollers and races, can be considered as boundaries for candidate solutions. Inadequate values of these properties can render the choice of a material impractical and make alternatives more reasonable.

5.2.2. Specifications for polymers[2]

The following tables list specifications for state-of-the-art polymers as a benchmark against which the polymers developed in GEARBODIES shall be compared. The specifications in Table 25 refer to the polyamide PA66, which is the most relevant given its wide use. Polymer PA 46, despite having similar characteristics to PA66 and being both appreciated in sectors such as the automotive, is more difficult to process than PA 66 and this can increase the price significantly. Therefore, the focus will be on PA66. Table 26 refers to PEEK, also one of the most widely used. In GEARBODIES, the specifications will be used to produce test specimens of the polymers, which will then be analysed and compared, particularly in terms of their ageing behaviour in the presence of selected state-of-the-art lubricants. Based on the GEARBODIES laboratory work, indications for future optimisation of the polymer-metal-lubricant combination will be proposed. The proposed future polymers must respond to the lifetime and standardisation/regulation requirements, as follows.

The polymers for GEARBODIES **shall** be developed to resist ageing up to 12.5 years with the selected low-viscosity lubricants, in line with the lifetime performance requirement of §4.4.

The materials **shall** comply with the applicable standards.

5.2.3. Specifications for lubricants and lubrication system

Lubricants **shall** comply with EN12081.

The lubrication system **shall** be suitable for high-speed applications.

The lubrication system **shall** be compatible with the selected lubricant.

The lubrication system **shall** represent a reasonable practical balance (in terms of effect on LCC and operational considerations) between lubricant lifetime (replacement intervals) and ease of replacement.

[2] http://www.matweb.com/index.aspx

Table 25. Specifications for polymers, polyamide 66 (PA66).

PA66

Physical Properties

- Specific Gravity 1.15 g/cc
- Water Absorption 0.30 %
- Water Absorption at Saturation 7.0 %

Mechanical Properties

- Tensile Strength 82.7 MPa
- Tensile Strength at 65°C (150°F) 41.4 MPa
- Elongation at Break 50 %
- Tensile Modulus 2.93 GPa
- Flexural Strength 103 MPa
- Flexural Modulus 3.10 GPa
- Compressive Strength 86.2 MPa
- Compressive Modulus 2.90 GPa
- Shear Strength 68.9 MPa
- Izod Impact, Notched 0.320 J/cm
- Coefficient of Friction, Dynamic 0.25
- K (wear) Factor 161 x 10-8 mm³/N-M
- Limiting Pressure Velocity 0.0946 MPa-m/sec

Electrical Properties

- Surface Resistivity per Square >= 1.00e+13 ohm
- Dielectric Constant 3.6
- Dielectric Strength 15.7 kV/mm
- Dissipation Factor 0.020

Thermal Properties

- Thermal Conductivity 0.245 W/m-K 1.70
- Melting Point 260 °C
- Maximum Service Temperature, Air 98.9 °C
- Deflection Temperature at 1.8 MPa 93.3 °C
- Flammability, UL94 V-2

Chemical Resistance Properties

- Acids, Strong (pH 1-3) Unacceptable
- Acids, Weak Limited
- Alcohols Limited
- Alkalies, Strong (pH 11-14) Unacceptable
- Alkalies, Weak Limited
- Chlorinated Solvents Limited
- Conductive / Static Dissipative No
- Continuous Sunlight Limited
- Hot Water / Steam Limited
- Hydrocarbons - Aliphatic Acceptable

Table 26. Specifications for polymers, polyetheretherketone (PEEK).

PEEK

Physical Properties

- Density 1.26 - 1.50 g/cc
- Water Absorption 0.0500 - 0.500 %
- Moisture Absorption at Equilibrium 0.0700 - 0.500 %
- Water Absorption at Saturation 0.100 - 1.65 %
- Viscosity 90000 - 380000 cP
- Linear Mold Shrinkage 0.00110 - 0.0180 cm/cm
- Melt Flow 3.00 - 140 g/10 min

Mechanical Properties

- Tensile Strength, Ultimate 48.0 - 265 MPa
- Elongation at Break 1.50 - 110 %
- Elongation at Yield 4.50 - 45.0 %
- Modulus of Elasticity 2.20 - 6.48 GPa
- Flexural Yield Strength 89.6 - 380 MPa
- Flexural Modulus 3.00 - 24.0 GPa
- Flexural Strain at Break 3.00 - 7.00 %
- Compressive Yield Strength 12.0 - 300 MPa
- Compressive Modulus 0.138 - 4.14 GPa
- Shear Strength 55.2 - 95.1 MPa
- Coefficient of Friction 0.150 - 0.500
- K (wear) Factor 15.0 - 755 x 10-8 mm³/N-M
- Limiting Pressure Velocity 0.298 - 1.26 MPa-m/sec
- Compression Set 70.0 - 70.0 %

Electrical Properties

- Electrical Resistivity 15000 - 3.80e+17 ohm-cm
- Surface Resistance 3000 - 1.00e+18 ohm
- Dielectric Constant 2.20 - 10.9
- Dielectric Strength 15.0 - 200 kV/mm
- Dissipation Factor 0.00100 - 0.518

Thermal Properties

- Specific Heat Capacity 1.34 - 2.20 J/g-°C
- Thermal Conductivity 0.173 - 0.950 W/m-K
- Melting Point 332 - 386 °C
- Maximum Service Temperature, Air 20.0 - 310 °C
- Deflection Temperature at 0.46 MPa 182 - 210 °C

5.3. Overview of high-level specifications

An overview of the specifications given above is provided in Table 27 and Table 28 for the "focussed" and "open" concepts respectively.

The "focussed" concept is the one to be validated in GEARBODIES (TRL5). It incorporates a novelty that is disruptive with respect to today's trends for high-speed applications: the use of ball rollers made possible due to an innovative layout called Twin-tandem®. Moreover, the concept is intended mainly for use on innovative running gear with in-board bearings. This layout is capable of significant benefits in terms of reduction of unsprung mass and aerodynamic resistance. Given the extra-long targeted maintenance interval, it should not cause negative impacts in terms of inspection and running gear maintenance overall. Lubricant, sealing and materials rely on advanced state-of-the-art solutions.

Table 27. "Focussed" concept (TRL5).

Focussed concept (TRL5) Target extra-long maintenance interval: 3 Mkm	
Rollers	balls
Layout	novel Twin-tandem® layout
Lubricant / lubrication concept	SOA grease
Roller material	SOA bearing steel
Ring material	SOA bearing steel
Cage material	SOA polymeric material
Sealing	SOA cartridge seals
Running gear configuration	novel high-speed bogie with in-board bearings

The "open" concept is the one to be developed to proof-of-concept level (TRL3-4) based on the results of the GEARBODIES development tests. At the end of this first phase of GEARBODIES, its specification is in fact still quite open as its name suggests. There are several combinations that are still possible at this stage. The scope is focussed in terms of possible materials in line with the description of work of the project. The focus will be on High Entropy Alloys for roller and ring materials, which are considered as the most promising, although other technologies described in §3 are not to be ruled out for future applications (e.g. ceramics). After the GEARBODIES development tests (micro-structural, structural, tribological etc.) it will be possible to specify the material more in detail. For the polymer materials, the focus will be on polyamides and PEEK, which are the most promising. The development tests will show the ageing behaviour of state-of-the-art or

novel polymer/lubricant combinations, thus allowing the choice of the most promising combination in terms of ageing properties and specifying the eventual necessary improvements (e.g. nano-particle additives) to achieve ultra-long lifetime.

Table 28. "Open" concepts (TRL3-4).

Open concepts (TRL3-4) Target ultra-long maintenance interval: 5.625 Mkm Target ultra-long lifetime: Up to 11.25 Mkm (2 maintenance intervals, 25 years at 0.45 Mkm/year SPD1)	
Rollers	Open: balls, cylinders, tapered
Layout	Open: Twin-tandem®, conventional cylindrical, conventional tapered
Lubricant / lubrication concept	SOA grease or oil, novel oil lubrication concept
Roller material	Novel HEA or HEA coated, advanced steel grades
Ring material	Novel HEA or HEA coated, advanced steel grades
Cage material	novel polymeric material based on PA or PEEK
Sealing	SOA cartridge seals
Running gear configurations	Conventional high-speed bogie layout and/or in-board-bearing configuration

6. Conclusions

The GEARBODIES project is set to develop design concepts of extra-long and ultra-long lifetime bearing units with low operating costs up to TRL 5 suitable for high-speed rail applications such as that of SHIFT2RAIL's System Platform Demonstrator SPD1.

This report serves as a foundation for future GEARBODIES work by providing high-level specifications for the future design concepts and a short list of valid technology concepts based on the identified user requirements and building on terms of reference represented by the state-of-the-art, standards, and emerging solutions. The document also serves as a discussion document for interaction with the PIVOT-2 consortium on the relevance of GEARBODIES work for the running-gear Technological Demonstrator TD1.4.

The work behind the document corresponds to GEARBODIES Sub-Task 1.1.3 "Overview and assessment of journal bearings" and Sub-Task 1.2.3 "Requirements and specifications for journal bearings", described in Annex 1 of the Grant Agreement. There is no deviation to be reported between the actual work and the sub-task work descriptions.

The new knowledge described herein consists mainly of the compendium of conventional and emerging technology concepts for high-speed, and the derived requirements and specifications that are tailored to SPD1. From this information, promising research directions are identified.

The analysis of conventional and emerging concepts has shown that the current state-of-the-art sees mostly tapered roller bearings, and some cylindrical roller bearings, used for high-speed applications. As technology has evolved over the decades, it has become possible to exploit the axial-load bearing capability of the tapered roller design whilst keeping the generated frictional power at the low levels required by high-speed running.

In terms of overall design, innovations address details of the above configurations. No evidence was found of any breakthrough solution deviating from the conventional tapered or cylindrical roller design. Similarly, lubrication concept innovations regard details of the seals and incremental improvements in lubricant performance. Research on the polymeric materials used in bearings focusses on structural and tribological properties, but not on ageing behaviour for ultra-long lifetime.

The currently possible maintenance intervals are indicatively around 1.65 Mkm (2- 4 years for high-speed applications), with an overall bearing lifetime of 3.3 Mkm (two maintenance intervals). The fatigue failure modes are no longer crucial in determining the maintenance interval. It is the lubricant that determines the interval.

Approximately doubling the maintenance interval to about 3 Mkm (4-8 years, "extra-long lifetime" of 8-16 years and 6 Mkm) should not lead to fatigue problems re-emerging if state-of-the-art materials are used. For this purpose, though, the generated frictional power needs to be further reduced with respect to state-of-the-art designs. In the proposed "focussed" Design Concept, with a higher TRL, this is obtained by radical changes in roller-race

geometry and lubrication concept, with the use of ball rollers and oil instead of grease.

Extending the lifetime further to ultra-long durations (25 years or over 11 Mkm) is a major challenge. In addition to the need for ultra-low friction and perfect sealing to preserve the lubricant, the fatigue problem could re-emerge due to the metastable phases (e.g. martensite) that gradually develop in state-of-the-art steels over ultra-long periods. In this sense, the promising phase-stability properties of High Entropy Alloys could be key for an ultra-long lifetime. Coating rollers and races with these materials, as well as making the components entirely of HEA or other advanced materials are all options that need to be evaluated further. The polymeric materials will also have to stand the test of time, and the conventional polyamides and PEEK might be able to achieve it already, or with special additives that will be determined through further research specified as a result of the GEARBODIES laboratory tests.

The jump towards ultra-long lifetime is more the realm of the proposed "open" Design Concepts, which will necessarily remain at lower TRLs at the end of GEARBODIES. More far-fetched solutions such as radical lubrication solutions (active or passive) cooling and ferromagnetic particle removal could be considered in future research. At the moment, these concepts are still quite open, as the name suggests. The work performed in GEARBODIES WP4 has the objective of further narrowing down the design options.

All in all, this report describes the results of the work on journal bearings performed in GEARBODIES WP1, that is in line with the original plan. Its main outcomes have been setting requirements consistent with SHIFT2RAIL's SPD1 and developing as a consequence the specifications for a higher-TRL bearing Design Concept and lower-TRL Design Concepts to be further refined and developed in the remainder of the project's duration.

References

Becher, P. F., Sun, E. Y., Plucknett, K. P., Alexander, K. B., Hsueh, C.-H., Lin, H.-T., Waters, S. B., Westmoreland, C. G., Kang, E.-S., Hirao, K., & Brito, M. E. (1998). Microstructural Design of Silicon Nitride with Improved Fracture Toughness: I, Effects of Grain Shape and Size. *Journal of the American Ceramic Society*, *81*(11), 2821–2830. https://doi.org/10.1111/j.1151-2916.1998.tb02702.x

Bobzin, K., Lugscheider, E., Maes, M., Gold, P. W., Loos, J., & Kuhn, M. (2004). High-performance chromium aluminium nitride PVD coatings on roller bearings. *Coatings Tribology - Properties, Techniques and Applications in Surface Engineering*, *188–189*(2), 649–654. https://doi.org/10.1016/j.surfcoat.2004.07.030

Borgaonkar, A. V., & Syed, I. (2020). Effect of coatings on rolling contact fatigue and tribological parameters of rolling/sliding contacts under dry/lubricated conditions: A review. *Coatings Tribology - Properties, Techniques and Applications in Surface Engineering*, *45*(1), 30. https://doi.org/10.1007/s12046-020-1266-y

Bracciali, A. (2016). Railway wheelsets: History, research and developments. *International Journal of Railway Technology*, *5*(1), 23–52.

Braic, V., Vladescu, A., Balaceanu, M., Luculescu, C. R., & Braic, M. (2012). Nanostructured multi-element (TiZrNbHfTa)N and (TiZrNbHfTa)C hard coatings. *Surface and Coatings Technology*, *211*(19), 117–121. https://doi.org/10.1016/j.surfcoat.2011.09.033

Cantor, B., Chang, I. T. H., Knight, P., & Vincent, A. J. B. (2004). Microstructural development in equiatomic multicomponent alloys. *Materials Science and Engineering: A*, *375–377*(5), 213–218. https://doi.org/10.1016/j.msea.2003.10.257

CEN/TS 13103-2:2020. (2020). *Railway applications—Wheelsets and bogies—Part 2: Design method for axles with internal journals*.

Chen, J., Geng, M., Li, Y., Yang, Z., Chai, Y., & He, G. (2019). Erosion Resistance and Damage Mechanism of TiN/ZrN Nanoscale Multilayer Coating. *Coatings Tribology - Properties, Techniques and Applications in Surface Engineering*, *9*(2), 64. https://doi.org/10.3390/coatings9020064

Chen, M.-R., Lin, S.-J., Yeh, J.-W., Chuang, M.-H., Chen, S.-K., & Huang, Y.-S. (2006). Effect of vanadium addition on the microstructure, hardness, and wear resistance of Al0.5CoCrCuFeNi high-entropy alloy. *Metallurgical and Materials Transactions A*, *37*(5), 1363–1369. https://doi.org/10.1007/s11661-006-0081-3

Chen, S. Y., Wang, L., Li, W. D., Tong, Y., Tseng, K. K., Tsai, C. W., Yeh, J. W., Ren, Y., Guo, W., Poplawsky, J. D., & Liaw, P. K. (2019). Peierls barrier characteristic and anomalous strain hardening provoked by dynamic-strain-aging strengthening in a body-centered-cubic high-entropy alloy. *Materials Research Letters*, *7*(12), 475–481. https://doi.org/10.1080/21663831.2019.1658233

Chen, T. K., Shun, T. T., Yeh, J. W., & Wong, M. S. (2004). Nanostructured nitride films of multi-element high-entropy alloys by reactive DC sputtering. *Surface and Coatings Technology*, *188–189*(5), 193–200. https://doi.org/10.1016/j.surfcoat.2004.08.023

Chen, W., Fu, Z., Fang, S., Wang, Y., Xiao, H., & Zhu, D. (2013). Processing, microstructure and properties of Al0.6CoNiFeTi0.4 high entropy alloy with nanoscale twins. *Materials Science and Engineering: A*, *565*(10), 439–444. https://doi.org/10.1016/j.msea.2012.12.072

Chen, W., Fu, Z., Fang, S., Xiao, H., & Zhu, D. (2013). Alloying behavior, microstructure and mechanical properties in a FeNiCrCo0.3Al0.7 high entropy alloy. *Materials & Design*, *51*(10), 854–860. https://doi.org/10.1016/j.matdes.2013.04.061

Chuang, M.-H., Tsai, M.-H., Tsai, C.-W., Yang, N.-H., Chang, S.-Y., Yeh, J.-W., Chen, S.-K., & Lin, S.-J. (2013). Intrinsic surface hardening and precipitation kinetics of Al0.3CrFe1.5MnNi0.5 multi-component alloy. *Journal of Alloys and Compounds*, *551*(13), 12–18. https://doi.org/10.1016/j.jallcom.2012.09.133

Chuang, M.-H., Tsai, M.-H., Wang, W.-R., Lin, S.-J., & Yeh, J.-W. (2011). Microstructure and wear behavior of AlxCo1.5CrFeNi1.5Tiy high-entropy alloys. *Acta Materialia*, *59*(16), 6308–6317. https://doi.org/10.1016/j.actamat.2011.06.041

Clavería, I., Lostalé, A., Fernández, Á., Castell, P., Elduque, D., Mendoza, G., & Zubizarreta, C. (2019). Enhancement of Tribological Behavior of Rolling Bearings by Applying a Multilayer ZrN/ZrCN Coating. *Coatings Tribology - Properties, Techniques and Applications in Surface Engineering*, *9*(7), 434. https://doi.org/10.3390/coatings9070434

EN 12080:2017. (2017). *Railway applications—Axleboxes—Rolling bearing*.

EN 12082:2017. (2017). *Railway applications—Axleboxes—Performance testing*.

EN 13103-1:2017. (2017). *Railway applications—Wheelsets and bogies—Part 1: Design method for axles with external journals*.

EN 15663:2017+A1:2018. (2017). *Railway applications—Vehicle reference masses*.

EN 15827:2011. (2011). *Railway applications—Requirements for bogies and running gears*.

EN 50125-1:2014. (2014). *Railway applications. Environmental conditions for equipment. Rolling stock and on-board equipment*.

Entezami, M. (2020). Perspectives on railway axle bearing condition monitoring. *Proceedings of the Institution of Mechanical Engineers, Part F: Journal of Rail and Rapid Transit*.

European Commission. (2014). *Commission Regulation (EU) No 1302/2014 of 18 November 2014 concerning a technical specification for interoperability relating to the rolling stock—Locomotives and passenger rolling stock subsystem of the rail system in the European Union*.

European Patent Office. (2021). *Espacenet*. https://worldwide.espacenet.com/

Fang, S., Chen, W., & Fu, Z. (2014). Microstructure and mechanical properties of twinned Al0.5CrFeNiCo0.3C0.2 high entropy alloy processed by mechanical alloying and spark

plasma sintering. *Materials & Design (1980-2015)*, *54*(2), 973–979. https://doi.org/10.1016/j.matdes.2013.08.099

Faraji, G., Kim, H. S., & Kashi, H. T. (2018). Introduction. In G. Faraji, H. S. Kim, & H. T. Kashi (Eds.), *MATEC Web of Conferences* (Vol. 165, pp. 1–17). Elsevier. https://doi.org/10.1016/B978-0-12-813518-1.00020-5

Fiaschi, G., Rota, A., Ballestrazzi, A., Marchetto, D., Vezzalini, E., & Valeri, S. (2019). A Chemical, Mechanical, and Tribological Analysis of DLC Coatings Deposited by Magnetron Sputtering. *Lubricants*, *7*(4), 38. https://doi.org/10.3390/lubricants7040038

FINE-1. (2018). *D3.1 Energy baseline*.

Friedrich, K. (2018). Polymer composites for tribological applications. *Advanced Industrial and Engineering Polymer Research*, *1*(1), 3–39.

Fu, H., & Rivera-Díaz-del-Castillo, P. E. J. (2018). A unified theory for microstructural alterations in bearing steels under rolling contact fatigue. *Acta Materialia*, *155*(2), 43–55. https://doi.org/10.1016/j.actamat.2018.05.056

Fu, H., Song, W., Galindo-Nava, E. I., & Rivera-Díaz-del-Castillo, P. E. J. (2017). Strain-induced martensite decay in bearing steels under rolling contact fatigue: Modelling and atomic-scale characterisation. *Acta Materialia*, *139*(11), 163–173. https://doi.org/10.1016/j.actamat.2017.08.005

García, M., van Vliet, G., ten Cate, M. G., Chavez, F., Norder, B., Kooi, B., van Zyl, W. E., Verweij, H., & Blank, D. H. (2004). Large-scale extrusion processing and characterization of hybrid nylon-6/SiO2 nanocomposites. *Polymers for Advanced Technologies*, *15*(4), 164–172.

George, E. P., Curtin, W. A., & Tasan, C. C. (2020). High entropy alloys: A focused review of mechanical properties and deformation mechanisms. *Acta Materialia*, *188*(1), 435–474. https://doi.org/10.1016/j.actamat.2019.12.015

German Patent and Trademark Office. (2021). *Depatis*. https://depatisnet.dpma.de/

Grigoriev, S. N., Sobol, O. V., Beresnev, V. M., Serdyuk, I. V., Pogrebnyak, A. D., Kolesnikov, D. A., & Nemchenko, U. S. (2014). Tribological characteristics of (TiZrHfVNbTa)N coatings applied using the vacuum arc deposition method. *Journal of Friction and Wear*, *35*(5), 359–364. https://doi.org/10.3103/S1068366614050067

Hammond, V. H., Atwater, M. A., Darling, K. A., Nguyen, H. Q., & Kecskes, L. J. (2014). Equal-Channel Angular Extrusion of a Low-Density High-Entropy Alloy Produced by High-Energy Cryogenic Mechanical Alloying. *JOM*, *66*(10), 2021–2029. https://doi.org/10.1007/s11837-014-1113-x

Harris, T. A., & Kotzalas, M. N. (2006). *Essential Concepts of Bearing Technology* (K. Holmberg & A. Matthews, Eds.; Vol. 9). CRC Press. https://www.mdpi.com/2079-6412/9/2/64

Hemphill, M. A., Yuan, T., Wang, G. Y., Yeh, J. W., Tsai, C. W., Chuang, A., & Liaw, P. K. (2012). Fatigue behavior of Al0.5CoCrCuFeNi high entropy alloys. *Acta Materialia*, *60*(16), 5723–5734. https://doi.org/10.1016/j.actamat.2012.06.046

Hou, X., Shan, C. X., & Choy, K.-L. (2008). Microstructures and tribological properties of PEEK-based nanocomposite coatings incorporating inorganic fullerene-like nanoparticles. *Surface and Coatings Technology*, *202*(11), 2287–2291.

Hsu, C.-Y., Sheu, T.-S., Yeh, J.-W., & Chen, S.-K. (2010). Effect of iron content on wear behavior of AlCoCrFexMo0.5Ni high-entropy alloys. *Wear*, *268*(5), 653–659. https://doi.org/10.1016/j.wear.2009.10.013

Hsu, C.-Y., Yeh, J.-W., Chen, S.-K., & Shun, T.-T. (2004). Wear resistance and high-temperature compression strength of Fcc CuCoNiCrAl0.5Fe alloy with boron addition. *Metallurgical and Materials Transactions A*, *35*(5), 1465–1469. https://doi.org/10.1007/s11661-004-0254-x

Huang, P.-K., Yeh, J.-W., Shun, T.-T., & Chen, S.-K. (2004). Multi-Principal-Element Alloys with Improved Oxidation and Wear Resistance for Thermal Spray Coating. *Advanced Engineering Materials*, *6*(5), 74–78. https://doi.org/10.1002/adem.200300507

IMPACT-1. (2017). *D3.3 Use cases for SPDs*.

IMPACT-1. (2018). *D4.1 Reference scenarios*.

ISO 281:2007. (2007). *Rolling bearings—Dynamic load ratings and rating life*.

ISO 683-17:2014. (2014). *Heat-treated steels, alloy steels and free-cutting steels Ball and roller bearing steels*.

ISO 15243:2017. (2017). *Rolling bearings—Damage and failures—Terms, characteristics and causes.*

Ivchenko, M. V., Pushin, V. G., & Wanderka, N. (2014). High-entropy equiatomic AlCrFeCoNiCu alloy: Hypotheses and experimental data. *Technical Physics*, *59*(2), 211–223. https://doi.org/10.1134/S1063784214020108

Iwnicki, S. (2006). *Handbook of railway vehicle dynamics*. CRC press.

Jacobs, G., & Plogmann, M. (2014). Rolling Bearing Lubrication and Materials. In T. Mang (Ed.), *Encyclopedia of Lubricants and Lubrication* (2nd ed., Vol. 259, pp. 1618–1633). Springer. https://doi.org/10.1007/978-3-642-22647-2_297

Kao, Y.-F., Chen, T.-J., Chen, S.-K., & Yeh, J.-W. (2009). Microstructure and mechanical property of as-cast, -homogenized, and -deformed AlxCoCrFeNi (0≤x≤2) high-entropy alloys. *Journal of Alloys and Compounds*, *488*(1), 57–64. https://doi.org/10.1016/j.jallcom.2009.08.090

KG, S. T. A. & C., Faraji, G., Kim, H. S., & Kashi, H. T. (2012). Failure Analysis INA Bearing failure mode archive. In *Proceedings of the Institution of Mechanical Engineers, Part J: Journal*

of Engineering Tribology (No. 2; Vol. 219, pp. 77–83). CRC/Taylor & Francis. https://doi.org/10.1243/135065005X9790

Khonsari, M. (2017). *Applied tribology: Bearing design and lubrication* (K. Holmberg & A. Matthews, Eds.; 2nd ed., Vol. 259). Wiley. https://www.sciencedirect.com/science/article/pii/S0043164805000104

Kilian, M. R. (2010). *Rolling bearings in high speed passenger traffic*. *49071*, 47–56.

Klaffke, D., Santner, E., Spaltmann, D., & Woydt, M. (2005). Influences on the tribological behaviour of slip-rolling DLC-coatings. *Coatings Tribology - Properties, Techniques and Applications in Surface Engineering*, *259*(1), 752–758. https://doi.org/10.1016/j.wear.2005.01.008

Kloss,R. (n.a.). Adjustment of Tapered Roller Bearings in Mobile and Stationary Transmissions. *FAG Publication*.

Komiya, H. (2007). Rolling Bearing Lubrication Technology Trends and R & D Efforts. *Engineering Journal*, *1003E*, 50–58.

Laws, K. J., Crosby, C., Sridhar, A., Conway, P., Koloadin, L. S., Zhao, M., Aron-Dine, S., & Bassman, L. C. (2015). High entropy brasses and bronzes – Microstructure, phase evolution and properties. *Journal of Alloys and Compounds*, *650*(2), 949–961. https://doi.org/10.1016/j.jallcom.2015.07.285

Li, B., & Zhong, W.-H. (2011). Review on polymer/graphite nanoplatelet nanocomposites. *Journal of Materials Science*, *46*(17), 5595–5614.

Li, T., Sun, W., Meng, Z., Huo, J., Dong, J., & Wang, L. (2019). Dynamic investigation on railway vehicle considering the dynamic effect from the axle box bearings. *Advances in Mechanical Engineering*, *11*(4), 1687814019840503.

Li, W., Chen, S., & Liaw, P. K. (2020). Discovery and design of fatigue-resistant high-entropy alloys. *Scripta Materialia*, *187*(1), 68–75. https://doi.org/10.1016/j.scriptamat.2020.05.047

Li, W., Liaw, P. K., & Gao, Y. (2018). Fracture resistance of high entropy alloys: A review. *Intermetallics*, *99*(12), 69–83. https://doi.org/10.1016/j.intermet.2018.05.013

Li, W., Xie, D., Li, D., Zhang, Y., Gao, Y., & Liaw, P. K. (2021). Mechanical behavior of high-entropy alloys. *Progress in Materials Science*, *118*(1), 100777. https://doi.org/10.1016/j.pmatsci.2021.100777

Li, Y., Zhi, P., Chen, B., & Wang, Y. (2017). *Reliability Analysis of Bearing System in High Speed Railway and Software Implementation*. 2016 4th International Conference on Machinery, Materials and Information Technology Applications.

Liu, K., Nene, S. S., Frank, M., Sinha, S., & Mishra, R. S. (2018). Metastability-assisted fatigue behavior in a friction stir processed dual-phase high entropy alloy. *Materials Research Letters*, *6*(11), 613–619. https://doi.org/10.1080/21663831.2018.1523240

Liu, K., Nene, S. S., Frank, M., Sinha, S., & Mishra, R. S. (2019). Extremely high fatigue resistance in an ultrafine grained high entropy alloy. *Applied Materials Today*, *15*(12), 525–530. https://doi.org/10.1016/j.apmt.2019.04.001

Ma, S. G., & Zhang, Y. (2012). Effect of Nb addition on the microstructure and properties of AlCoCrFeNi high-entropy alloy. *Materials Science and Engineering: A*, *532*(13), 480–486. https://doi.org/10.1016/j.msea.2011.10.110

Makowiec, M. E., & Blanchet, T. A. (2017). Improved wear resistance of nanotube-and other carbon-filled PTFE composites. *Wear*, *374*, 77–85.

Marcos-García, J.-A., Martínez-Monés, A., & Dimitriadis, Y. (2015). DESPRO: A method based on roles to provide collaboration analysis support adapted to the participants in CSCL situations. *Computers & Education*, *82*, 335–353.

McCook, N. L., Hamilton, M. A., Burris, D. L., & Sawyer, W. G. (2007). Tribological results of PEEK nanocomposites in dry sliding against 440C in various gas environments. *Wear*, *262*(11–12), 1511–1515.

Mészáros, L., & Szakács, J. (2016). Low-cycle fatigue properties of basalt fiber and graphene reinforced polyamide 6 hybrid composites. *Journal of Reinforced Plastics and Composites*, *35*(22), 1671–1681.

Miracle, D. B., & Senkov, O. N. (2017). A critical review of high entropy alloys and related concepts. *Acta Materialia*, *122*(11), 448–511. https://doi.org/10.1016/j.actamat.2016.08.081

Murty, B. S. (2019). High-Entropy Alloys. In G. Faraji, H. S. Kim, & H. T. Kashi (Eds.), *Applied Materials Today* (Vol. 15). Elsevier. https://doi.org/10.1016/C2017-0-03317-7

NAKAMURA, K., HOSOYA, T., HIBINO, S., HANSAKA, M., MAMADA, S., & YOSHIDA, H. (2008). Development of Axle Bearing Lip-type Seal for High-speed Shinkansen Vehicles. *Quarterly Report of RTRI*, *49*(4), 237–243.

NSK. (2020a). *Axle Bearings for Railway Rolling Stock, Cylindrical Roller Bearings*. https://www.nsk.com/common/data/ctrgPdf/e1239.pdf

NSK. (2020b). *Bearings for Railway Rolling Stock*. http://www.nsk-literature.com/en/railway-industry-bearings/

NTN-SNR. (2020). *RAILWAY SOLUTIONS PERFORMANCE THAT GOES THE DISTANCE*. https://www.ntn-snr.com/sites/default/files/2017-03/en_railway_solutions.pdf

Oila, A., Shaw, B. A., Aylott, C. J., & Bull, S. J. (2005). Martensite decay in micropitted gears. *Proceedings of the Institution of Mechanical Engineers, Part J: Journal of Engineering Tribology*, *219*(2), 77–83. https://doi.org/10.1243/135065005X9790

Qiu, M., Chen, L., Li, Y., & Yan, J. (1994). Chapter 3 Tribology of Coatings. In K. Holmberg & A. Matthews (Eds.), *Coatings Tribology—Properties, Techniques and Applications in Surface*

Engineering (Vol. 28, pp. 33–124). Elsevier. https://www.sciencedirect.com/science/article/pii/S0167892208707533

Qiu, M., Chen, L., Li, Y., & Yan, J. (2017). Bearing Tribology. In G. Faraji, H. S. Kim, & H. T. Kashi (Eds.), *Procedia Engineering* (Vol. 74). Springer Berlin Heidelberg. https://doi.org/10.1007/978-3-662-53097-9

Quagliato, L., Kim, Y., Fonseca, J. H., Han, D., Yun, S., Lee, H., Park, N., Lee, H., & Kim, N. (2020). The influence of fiber orientation and geometry-induced strain concentration on the fatigue life of short carbon fibers reinforced polyamide-6. *Materials & Design*, *190*, 108569.

Ranganathan, S. (2003). Alloyed pleasures: Multimetallic cocktails. *Current Science*, *85*(10), 1404–1406. https://doi.org/10.1016/j.msea.2003.10.257

Robert, J., Schmidt-Amelunxen, M., Schmitz, R., & Olsa, J. (2006a). Lubrication of thermoplastic materials. *Journal of Synthetic Lubrication*, *23*(4), 153–166.

Robert, J., Schmidt-Amelunxen, M., Schmitz, R., & Olsa, J. (2006b). Lubrication of thermoplastic materials. *Journal of Synthetic Lubrication*, *23*(4), 153–166.

Robert, J., Schmidt-Amelunxen, M., Schmitz, R., & Olsa, J. (2006). Lubrication of thermoplastic materials. *Journal of Synthetic Lubrication*, *23*(4), 153–166.

Robertson, J. (2002). Diamond-like amorphous carbon. *Coatings Tribology - Properties, Techniques and Applications in Surface Engineering*, *37*(4), 129–281. https://doi.org/10.1016/S0927-796X(02)00005-0

Rymuza, Z. (2013). Polymer bearings. In *Encyclopedia of Tribology* (pp. 2557–2562). Springer, Boston, MA.

Sachs, N. (2007). Practical plant failure analysis: A guide to understanding machinery deterioration and improving equipment reliability. In G. Faraji, H. S. Kim, & H. T. Kashi (Eds.), *Journal of the American Ceramic Society* (Vol. 81). CRC/Taylor & Francis. https://doi.org/10.1111/j.1151-2916.1998.tb02703.x

Schaeffler FAG. (n.a.). *Die Gestaltung von Wälzlagerungen*.

Schaeffler Technologies. (n.a.a). *Radsatzlager im Velaro CRH3 für China*.

Schaeffler Technologies. (n.a.b). *Radsatzlager im Velaro RUS für Russland*.

Schaeffler Technologies AG & Co. KG. (2019). *Axlebox Rolling Bearing Arrangements*. https://www.schaeffler.de/remotemedien/media/_shared_media/08_media_library/01_publications/schaeffler_2/tpi/downloads_8/tpi_256_de_en.pdf

Schlapp, M. (2018). Radlager für Hochgeschwindigkeitszüge. *Eisenbahntechnische Rundschau*.

Senkov, O. N., Wilks, G. B., Miracle, D. B., Chuang, C. P., & Liaw, P. K. (2010). Refractory high-entropy alloys. *Intermetallics*, *18*(9), 1758–1765. https://doi.org/10.1016/j.intermet.2010.05.014

Senkov, O. N., Wilks, G. B., Scott, J. M., & Miracle, D. B. (2011). Mechanical properties of Nb25Mo25Ta25W25 and V20Nb20Mo20Ta20W20 refractory high entropy alloys. *Intermetallics*, *19*(5), 698–706. https://doi.org/10.1016/j.intermet.2011.01.004

Shen, W.-J., Tsai, M.-H., Chang, Y.-S., & Yeh, J.-W. (2012). Effects of substrate bias on the structure and mechanical properties of (Al1.5CrNb0.5Si0.5Ti)Nx coatings. *Thin Solid Films*, *520*(19), 6183–6188. https://doi.org/10.1016/j.tsf.2012.06.002

SHIFT2RAIL. (2019). *ANNEX to GB decision no 8/2019. ANNUAL WORK PLAN and BUDGET 2020 adopted by the S2R GB on 14 November 2019 (Call text for S2R-OC-IP1-03-2020 Innovative technologies for Carbodies and Running Gear of the future)*.

Shukla, S., Wang, T., Cotton, S., & Mishra, R. S. (2018). Hierarchical microstructure for improved fatigue properties in a eutectic high entropy alloy. *Scripta Materialia*, *156*(12), 105–109. https://doi.org/10.1016/j.scriptamat.2018.07.022

Sidoroff, C., Lefort, E., Dierickx, P., André, J., & Benbahmed, A. (2017). Subsurface Rolling Contact Fatigue of Powder Metallurgy Steels for Aerospace Bearings. *Bearing Steel Technologies: 11th Volume, Advances in Steel Technologies for Rolling Bearings*, *85*(10), 1404–1406. https://doi.org/10.1520/STP160020160163

Sim, D.-S., Heo, T.-H., Park, Y., Kim, H. S., Shin, K.-H., & Cheong, S. K. (2016). Estimation of the Overhaul Cycle Time for KTX Wheelset Bearing by RCF Test. *Journal of the Korean Society of Safety*, *31*(1), 13–18.

SKF, Faraji, G., Kim, H. S., & Kashi, H. T. (2017). Bearing damage and failure analysis. In *Proceedings of the Institution of Mechanical Engineers, Part J: Journal of Engineering Tribology* (No. 2; Vol. 219, pp. 77–83). CRC/Taylor & Francis. https://doi.org/10.1243/135065005X9790

SKF Group. (2011). *Railway technical handbook, Volume 1, Axleboxes, wheelset bearings, sensors, condition monitoring, subsystems and services*. www.skf.com

SKF Group. (2012). *Railway technical handbook, Volume 2—Drive systems: Traction motor and gearbox bearings, sensors, condition monitoring and services, 13085EN: SKF, 2012*.

SKF Group. (2014). *Bearing damage and failure analysis*.

SKF Group. (n.a.). *Evolution of high-speed railway bearings*. https://evolution.skf.com/high-speed-railway/

Spencer, A. (2017). Ball Bearing and Roller Bearing Manufacturing Process and Technology. *Retrieved from the Internet.*

Spriestersbach, D., Grad, P., & Kerscher, E. (2014). Crack Initiation Mechanisms and Threshold Values of Very High Cycle Fatigue Failure of High Strength Steels. *Procedia Engineering*, *74*(10), 84–91. https://doi.org/10.1016/j.proeng.2014.06.229

Stewart, S., & Ahmed, R. (2002). Rolling contact fatigue of surface coatings—A review. *Encyclopedia of Lubricants and Lubrication*, *253*(11), 1132–1144. https://doi.org/10.1016/S0043-1648(02)00234-X

Sun, E. Y., Becher, P. F., Plucknett, K. P., Hsueh, C.-H., Alexander, K. B., Waters, S. B., Hirao, K., & Brito, M. E. (1998). Microstructural Design of Silicon Nitride with Improved Fracture Toughness: II, Effects of Yttria and Alumina Additives. *Journal of the American Ceramic Society*, *81*(11), 2831–2840. https://doi.org/10.1111/j.1151-2916.1998.tb02703.x

Swahn, H., Becker, P. C., & Vingsbo, O. (1976). Martensite decay during rolling contact fatigue in ball bearings. *Metallurgical Transactions A*, *7*(8), 1099–1110. https://doi.org/10.1007/BF02656592

Szeri, A. Z. (2010). *Fluid Film Lubrication* (K. Holmberg & A. Matthews, Eds.; 2nd ed., Vol. 9). Cambridge University Press. https://www.cambridge.org/core/books/fluid-film-lubrication/77700782A79566973BEA32202B8D06C1

Takeuchi, A., Amiya, K., Wada, T., Yubuta, K., & Zhang, W. (2014). High-Entropy Alloys with a Hexagonal Close-Packed Structure Designed by Equi-Atomic Alloy Strategy and Binary Phase Diagrams. *JOM*, *66*(10), 1984–1992. https://doi.org/10.1007/s11837-014-1085-x

Tang, W.-Y., Chuang, M.-H., Chen, H.-Y., & Yeh, J.-W. (2010). Microstructure and mechanical performance of new Al0.5CrFe1.5MnNi0.5 high-entropy alloys improved by plasma nitriding. *Surface and Coatings Technology*, *204*(20), 3118–3124. https://doi.org/10.1016/j.surfcoat.2010.02.045

Timken. (n.a.). *Global rail capabilities (catalog)*.

Tsai, K.-Y., Tsai, M.-H., & Yeh, J.-W. (2013). Sluggish diffusion in Co–Cr–Fe–Mn–Ni high-entropy alloys. *Acta Materialia*, *61*(13), 4887–4897. https://doi.org/10.1016/j.actamat.2013.04.058

Vail, J. R., Burris, D. L., & Sawyer, W. G. (2009). Multifunctionality of single-walled carbon nanotube–polytetrafluoroethylene nanocomposites. *Wear*, *267*(1–4), 619–624.

Vereschaka, A., Kataeva, E., Sitnikov, N., Aksenenko, A., Oganyan, G., & Sotova, C. (2018). Influence of Thickness of Multilayered Nano-Structured Coatings Ti-TiN-(TiCrAl)N and Zr-ZrN-(ZrCrNbAl)N on Tool Life of Metal Cutting Tools at Various Cutting Speeds. *Coatings Tribology - Properties, Techniques and Applications in Surface Engineering*, *8*(1), 44. https://doi.org/10.3390/coatings8010044

Wang, J., Chen, B., Liu, N., Han, G., & Yan, F. (2014). Combined effects of fiber/matrix interface and water absorption on the tribological behaviors of water-lubricated polytetrafluoroethylene-based composites reinforced with carbon and basalt fibers. *Composites Part A: Applied Science and Manufacturing*, *59*, 85–92.

Wang, M., Vail, S. A., Keirstead, A. E., Marquez, M., Gust, D., & Garcia, A. A. (2009). Preparation of photochromic poly (vinylidene fluoride-co-hexafluoropropylene) fibers by electrospinning. *Polymer*, *50*(16), 3974–3980.

Wang, Q. J., & Chung, Y.-W. (2013). *Encyclopedia of tribology*. Springer.

Wang, Y., & Wang, Q. J. (2013). Stribeck Curves. In Q. J. Wang & Y.-W. Chung (Eds.), *Encyclopedia of Tribology* (2nd ed., Vol. 253, pp. 3365–3370). Springer US. https://doi.org/10.1007/978-0-387-92897-5_148

Wang, Z., Wang, C., Zhao, Y.-L., Hsu, Y.-C., Li, C.-L., Kai, J.-J., Liu, C.-T., & Hsueh, C.-H. (2020). High hardness and fatigue resistance of CoCrFeMnNi high entropy alloy films with ultrahigh-density nanotwins. *International Journal of Plasticity*, *131*(1), 102726. https://doi.org/10.1016/j.ijplas.2020.102726

Welk, B. A., Williams, R. E. A., Viswanathan, G. B., Gibson, M. A., Liaw, P. K., & Fraser, H. L. (2013). Nature of the interfaces between the constituent phases in the high entropy alloy CoCrCuFeNiAl. *Ultramicroscopy*, *134*(2), 193–199. https://doi.org/10.1016/j.ultramic.2013.06.006

Werner, P., Altstädt, V., Jaskulka, R., Jacobs, O., Sandler, J. K., Shaffer, M. S., & Windle, A. H. (2004). Tribological behaviour of carbon-nanofibre-reinforced poly (ether ether ketone). *Wear*, *257*(9–10), 1006–1014.

Wetzel, B., Haupert, F., Friedrich, K., Zhang, M. Q., & Rong, M. Z. (2002a). Impact and wear resistance of polymer nanocomposites at low filler content. *Polymer Engineering & Science*, *42*(9), 1919–1927.

Wetzel, B., Haupert, F., Friedrich, K., Zhang, M. Q., & Rong, M. Z. (2002b). Impact and wear resistance of polymer nanocomposites at low filler content. *Polymer Engineering & Science*, *42*(9), 1919–1927.

Wu, J.-M., Lin, S.-J., Yeh, J.-W., Chen, S.-K., Huang, Y.-S., & Chen, H.-C. (2006). Adhesive wear behavior of AlxCoCrCuFeNi high-entropy alloys as a function of aluminum content. *Wear*, *261*(5), 513–519. https://doi.org/10.1016/j.wear.2005.12.008

Xue, H., Gao, T., Sun, Z., & Zhang, X. (2018). Fatigue crack initiation and propagation of 100Cr6 steel under torsional loading in very high cycle regime. *MATEC Web of Conferences*, *165*(4), 20003. https://doi.org/10.1051/matecconf/201816520003

Yan, K., Wang, N., Zhai, Q., Zhu, Y., Zhang, J., & Niu, Q. (2015). Theoretical and experimental investigation on the thermal characteristics of double-row tapered roller bearings of high speed locomotive. *International Journal of Heat and Mass Transfer*, *84*, 1119–1130.

Ye, Y. X., Liu, C. Z., Wang, H., & Nieh, T. G. (2018). Friction and wear behavior of a single-phase equiatomic TiZrHfNb high-entropy alloy studied using a nanoscratch technique. *Acta Materialia*, *147*(12), 78–89. https://doi.org/10.1016/j.actamat.2018.01.014

Yeh, Jien-Wei. (2006a). Recent progress in high entropy alloys. *Ann. Chim. Sci. Mat*, *31*(6), 633–648. https://doi.org/10.1007/s11661-006-0081-3

Yeh, Jien-Wei. (2006b). Recent progress in high entropy alloys. In G. Faraji, H. S. Kim, & H. T. Kashi (Eds.), *Ann. Chim. Sci. Mat* (Vol. 31). Elsevier. https://doi.org/10.1007/s11661-006-0081-3

Yeh, Jien-Wei, Lin, S.-J., Chin, T.-S., Gan, J.-Y., Chen, S.-K., Shun, T.-T., Tsau, C.-H., & Chou, S.-Y. (2004). Formation of simple crystal structures in Cu-Co-Ni-Cr-Al-Fe-Ti-V alloys with multiprincipal metallic elements. *Metallurgical and Materials Transactions A*, *35*(8), 2533–2536. https://doi.org/10.1007/s11661-006-0234-4

Yeh, J.-W., Chen, S.-K., Lin, S.-J., Gan, J.-Y., Chin, T.-S., Shun, T.-T., Tsau, C.-H., & Chang, S.-Y. (2004). Nanostructured High-Entropy Alloys with Multiple Principal Elements: Novel Alloy Design Concepts and Outcomes. *Advanced Engineering Materials*, *6*(5), 299–303. https://doi.org/10.1002/adem.200300567

Youssef, K. M., Zaddach, A. J., Niu, C., Irving, D. L., & Koch, C. C. (2015). A Novel Low-Density, High-Hardness, High-entropy Alloy with Close-packed Single-phase Nanocrystalline Structures. *Materials Research Letters*, *3*(2), 95–99. https://doi.org/10.1080/21663831.2014.985855

Zhang, G., Chang, L., & Schlarb, A. K. (2009). The roles of nano-SiO2 particles on the tribological behavior of short carbon fiber reinforced PEEK. *Composites Science and Technology*, *69*(7–8), 1029–1035.

Zhang, G., Schlarb, A. K., Tria, S., & Elkedim, O. (2008). Tensile and tribological behaviors of PEEK/nano-SiO2 composites compounded using a ball milling technique. *Composites Science and Technology*, *68*(15–16), 3073–3080.

Zhang, Y., Zuo, T. T., Tang, Z., Gao, M. C., Dahmen, K. A., Liaw, P. K., & Lu, Z. P. (2014). Microstructures and properties of high-entropy alloys. *Progress in Materials Science*, *61*(2), 1–93. https://doi.org/10.1016/j.pmatsci.2013.10.001

Zhong, Y. J., Xie, G. Y., Sui, G. X., & Yang, R. (2011). Poly (ether ether ketone) composites reinforced by short carbon fibers and zirconium dioxide nanoparticles: Mechanical properties and sliding wear behavior with water lubrication. *Journal of Applied Polymer Science*, *119*(3), 1711–1720.

Zhou, S., Wang, J., Wang, S., Ma, X., Huang, J., Zhao, G., & Liu, Y. (2018). Facile preparation of multiscale graphene-basalt fiber reinforcements and their enhanced mechanical and tribological properties for polyamide 6 composites. *Materials Chemistry and Physics*, *217*, 315–322.